GRASS®

NEXIS HINGE SYSTEMS

Our versatile hinge systems offer added value through a number of design solutions, proven technology, functionality and operating comfort.

Efficient and reliable. The versatile Nexis hinge system offers snap-on installation technology for a variety of cabinetry applications with a Soft-close or Self-close closing action.

Reliable Snap-on hinges with opening angles from 95° to 170° for long-lasting everyday service

The Nexis hinge series offers a wide variety of hinges for standard door applications, specialty door applications, and frame and frameless applications. Opening angle ranging from 95° to 170°, Nexis is offered in a screw-on and dowelled version in a 42mm, 45mm, 48mm boring pattern and the Nexis Impresso, tool-free installation, is offered in a 42/45mm and 45/48mm boring pattern.

Nexis Snap-on hinges attach to Nexis base plates with an audible click. Installation is user-friendly and reliable. Just pressing down the hinge with a finger is enough to attach it to the base plate. The hinge can be detached from the Snap-on base plate by simply releasing it with the lever at the front of the hinge arm.

NEXIS HINGE SYSTEM

Snap-on technology:
Quick mounting, efficient, secure.

Nexis Impresso
Quick, simple and reliable hardware without tools.

The Nexis Impresso hinge series is designed to assemble quickly and easily without tools. This is especially useful in cabinetry that is flat–packed and shipped unassembled with pre-drilled doors.

The Nexis Impresso hinge can be installed quickly and accurately on site. Simply insert the Nexis Impresso hinge into the bored door and close the hinge flap to engage. The hinge sits firmly and securely in the door and does not allow for twisting due to a 3 point connection of the hinge cup to the door.

The Nexis Impresso is perfect for door material such as particle board, solid wood, and MDF board.

Hinge cup with 'combination' drilling pattern.

All Impresso hinges are offered in a combination drilling pattern. Available combinations include a 42mm/45mm pattern and a 45mm/48mm pattern. Any Nexis Impresso hinge cup is suitable for at least two drilling patterns and covers all boring patterns offered in today's market.

Nexis - Proven technology makes Nexis the classic choice among hinge systems.

The Nexis hinges series offers added value through a number of design solutions that will meet any application requirements whether it be frame or frameless. Choose from hinge opening angles ranging from 95° to 170° and from hinges designed for special applications such as negative angle and pie cut corner applications.

The Nexis series is available in a screw-on or dowelled version and is offered in a 42mm, 45mm, and 48mm boring pattern. The Nexis base plates offer cam adjustment, 3 point fixing, screw-on or Euro screw versions for frame and frameless cabinetry. The plates mount easily in a user friendly snap-on method. Just one push connects the hinge to the plate.

Add a touch of innovation with the unique Soft-close® controlled closing device to bring a calming quiet to closing doors.

During the closing action, the Soft-close creates a cushion that controls and slows the door to a gentle stop. The Soft-close device attaches easily without tools for a simple installation.

Nexis

Table of Content

Opening Angle		Description	Full Overlay	Half Overlay	Inset	Page
		Features & Benefits				6
		Technical Information				8
110°		**Nexis 110** • For standard doors • Soft-close compatible	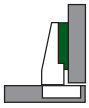	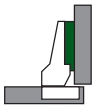	**100°** 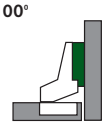	14
125°		**Nexis 125** • For standard doors • Soft-close compatible	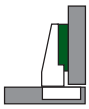	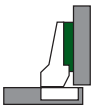		16
170°		**Nexis 170** • Wide-angle hinge with Zero protrusion • Soft-close compatible	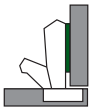	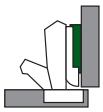		18
95°		**Nexis 95** • Designed for profile doors or thicker doors • Soft-close compatible	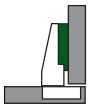	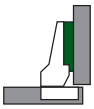	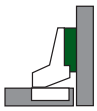	20
95°		**Nexis 95/40** • Designed for profile doors • For thick doors up to 35mm thickness • Excellent load-bearing capacity • 40mm cup drilling diameter	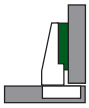	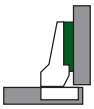	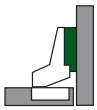	22
95°		**Nexis 95/+45°** • For +45° angle corner cabinet • Soft-close compatible		**Corner Angle**	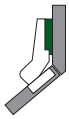	24
125°		**Nexis 125/-45°** • For negative 45° angle corner cabinet		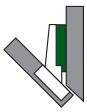		26
95°		**Nexis 95/90** • For blind corner application • Soft-close compatible	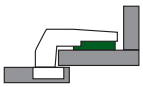		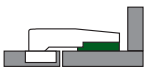	28
110°		**Nexis PCC** • For Pie-cut corner application • For door thicknesses 16 to 22mm			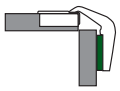	30
110°		**Nexis 21 PCC** • For pie-cut corner application • For door thicknesses 14 to 24mm			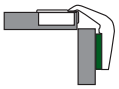	32

Nexis

Table of Content

Opening Angle		Description	Full Overlay	Half Overlay	Inset	Page
95°		**Nexis 17 GL** • For glass door application • For glass thicknesses 4 to 6mm • 26mm cup drilling diameter	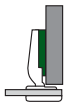	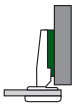		34
		Nexis base plates • For Nexis Impresso and Nexis hinges				36
		Soft-close for Nexis Impresso and Nexis **UniSoft**				40 44
		Tipmatic Plus **Tipmatic**				45
		Institutional Hinges				50
		Institutional hinge • For side panel thicknesses of 19mm (3/4") • Opening angles from 270° - 180°	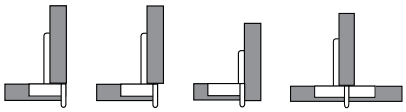			52
270°		**Nexis Slide-on 73** **Institutional hinge** • For door thicknesses 15 to 21mm • With wide-angle opening	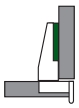			54
		Specialty Hinge Items				56
90°		**Tri-view-mirror hinge** • For medicine cabinets				57
		975 VZ PCC • Pie cut corner hinge				58
90°		**Flap hinge** • For flap thickness up to 20mm • 3-dimensional adjustment				60
180°		**Glass door hinges** • No bore glass door				61
		Machinery **GRASS PRO1**				62

Features and Benefits

Nexis

Features

- Opening angles from 95° to 170°
- Tool-free Soft-close option
- Combination drilling patterns for Impresso
- Specialty applications for angled and pie cut doors
- Tipmatic options are available

Depth adjustment (+3/-1mm)
via hinge arm for standard base plate

Depth adjustment (+3/-1mm)
via cam base plate

Ergonomic clip
mounts with a soft but audible click

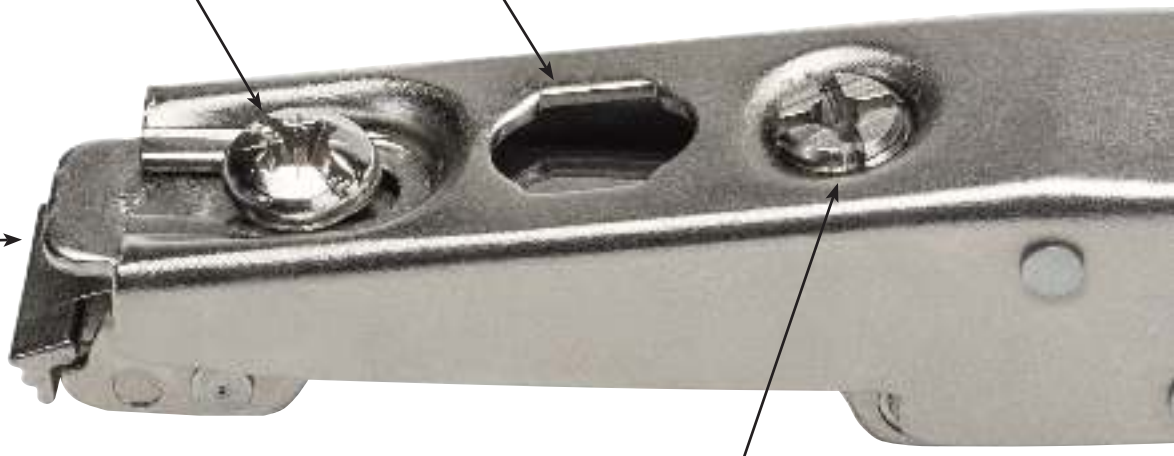

Side Adjustment (+1/-3mm)
via hinge arm

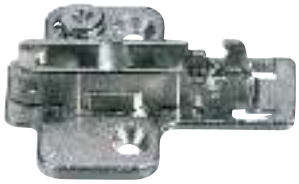

Height adjustment (±2mm)
via cam base plate

Tool-free Soft-close option
cushion control for a slow gentle stop

Features

- 3-dimensional adjustment with suitable base plate
  - Depth adjustment +3/-1mm
  - Height adjustment ±2mm
  - Side adjustment +1/-3mm
- For face frame or frameless cabinets
- Impresso for tool-free application
- 42mm, 45mm, and 48mm boring patterns

Impresso Hinges
for tool-free application

Nexis styles
dowelled and screw-on 42mm, 45mm, and 48mm patterns

Technical Information

Nexis

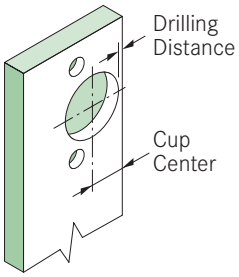

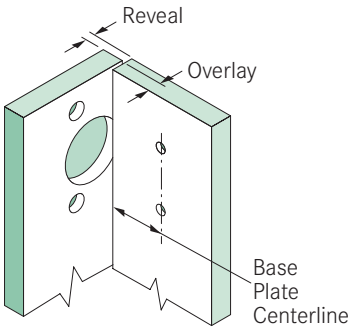

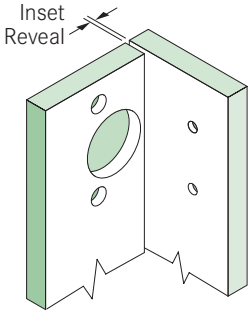

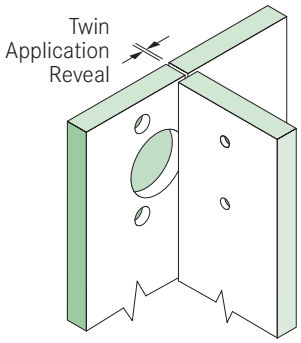

Number of Hinges per Door

The number of hinges is determined by the door height, door weight, quality of the material and the fixing of the cup and base plate.

The load and height data refer to 24" standard door widths.

The table refers to hinges with and without integrated dampers. Grass strongly recommends a trial mount for all hinges and base plates.

Attach base plates using all available screw holes.

Example:
For doors measuring 56" x 24" and weighing 19 lbs., Grass recommends the installation of 3 hinges.

Note: The distance between the top and bottom hinge must be greater than the width of the door.

The **Nexis** hinge meets and exceeds the minimum requirements of ANSI/BHMA A156.9 Standard.

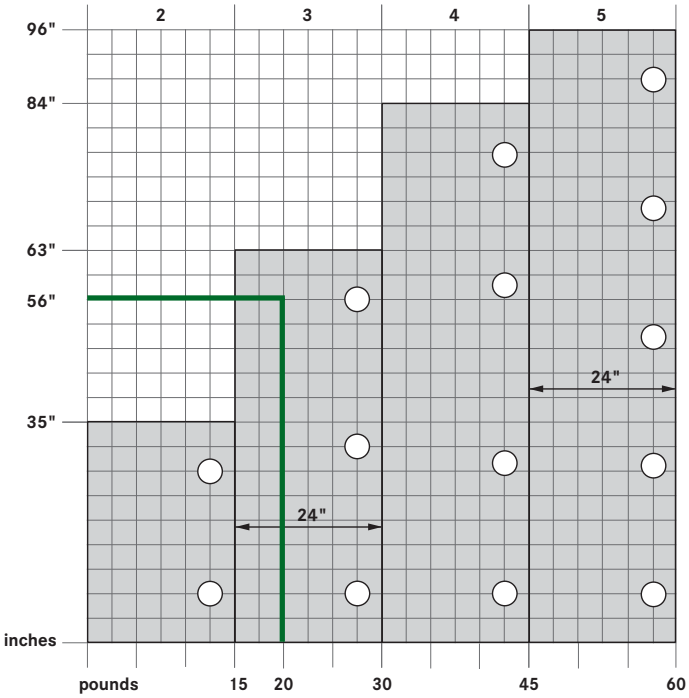

Nexis Drilling Patterns

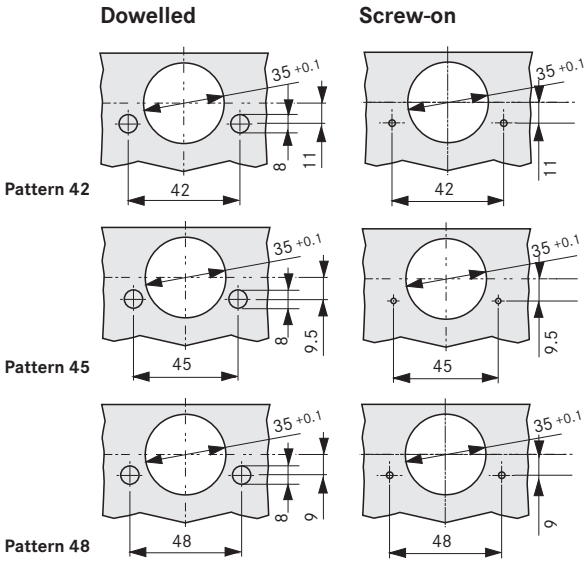

Nexis Impresso Drilling Patterns

Impresso 42/45 hinges accommodate cup drilling patterns of both 42mm and 45mm.

Impresso 45/48 hinges accommodate cup drilling patterns of both 45mm and 48mm.

Pattern 42 and 45

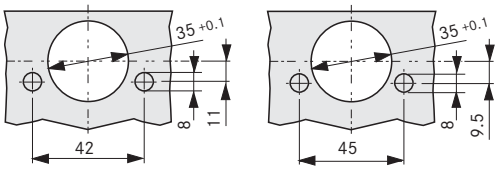

Pattern 45 and 48

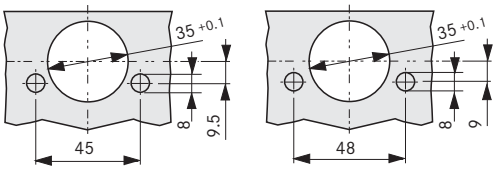

Adjustments

The options for height adjustment depend on the type of base plate. All adjustments can be made independent of one another.

For depth adjustment, select base plates have cam adjustment access through the hinge arm.

Use a #2 POZI drive screwdriver for hinge adjustments.

Attach base plates using all available screw holes.

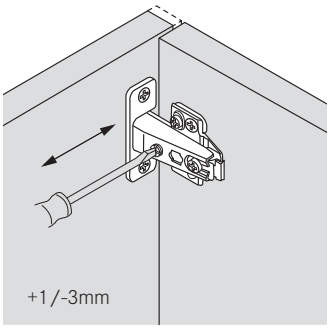

Side adjustment

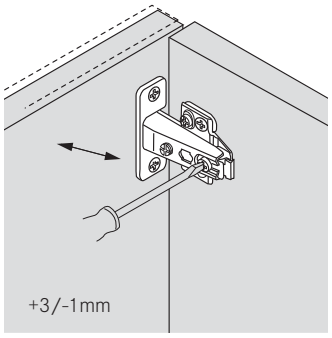

Depth adjustment

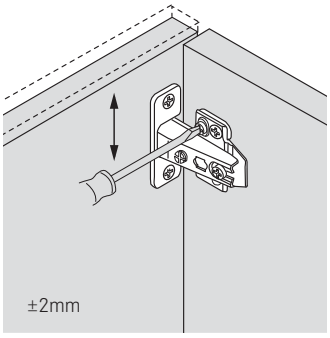

Height adjustment

Reveal

The reveal (R) is the distance required between two doors or between the door and side wall of the cabinet to allow sufficient space for opening the door. The required reveal width (R) depends on the thickness of the door.

Most cabinet makers prefer a reveal (R) of between 3mm and 6mm.

Full Overlay Door

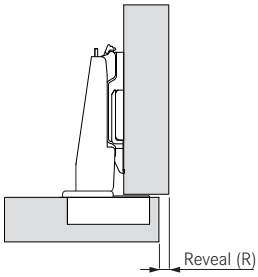

Half Overlay Door

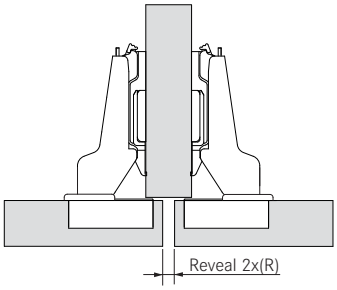

Inset Door

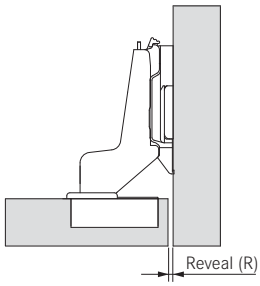

Reveal for Overlay and Half Overlay Door

The table shows the reveal necessary between two doors or between door and side wall to allow enough space for opening the door.

Example:
For a door thickness of 18mm and a drilling distance of 6mm, a gap of 0.2mm is needed.

Door thickness (DT)	Drilling Distance (DD) 3	4	5	6
16	0.1	0.1	0.1	0.1
18	0.2	0.2	0.2	0.2
19	0.3	0.3	0.3	0.3
20	0.4	0.4	0.4	0.4
22	0.7	0.7	0.7	0.7
24	1.0	1.0	1.0	1.0
26	1.4	1.4	1.4	1.4
28	1.9	1.9	1.9	1.9
30	3.8	2.9	2.6	2.5
	Reveal min. (R)			

Reveal for Inset Door

The table shows the minimum reveal for an inset door, depending on the drilling distance and base plate height.

Example: A drilling distance of 4mm results from using a base plate with height 04 in a reveal of 2mm.

Minimum Reveal (R)	Drilling Distance (DD) 3	4	5	6
0		2		4
1	2		4	
2		4		
	Base Plate Height (BPH)			

Note:
Reveal dimensions were determined with a door edge radius of 1mm. Hinge dimensions and calculation of gap with factory setting.

IMPORTANT
To determine the correct application Grass strongly recommends a trial mounting for all hinges and base plates.

Technical Information

Nexis

Minimum Gap

The Minimum gap is the gap between the closed door and the front of the cabinet.

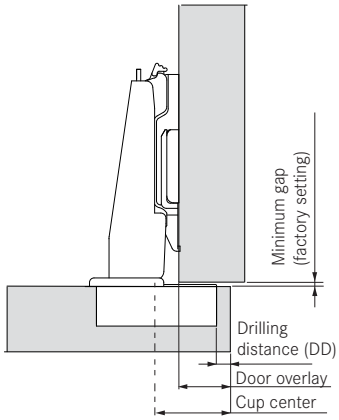

Drilling Distance

Drilling Distance (DD)		Cup Center (CC)	
1/8"	3	13/16"	20.5
5/32"	4	27/32"	21.5
3/16"	5	7/8"	22.5
1/4"	6	15/16"	23.5
9/32"	7	31/32"	24.5
5/16"	8	1"	25.5

The drilling distance (DD) is the distance between the edge of the door and the edge of the cup hole.

The cup center is the distance of the cup drilling distance plus 1/2 of the cup diameter.

Example:
For a door thickness (DT) of 26mm and a drilling distance (DD) of 6mm a minimum gap of 0.7mm is needed.

Door Thickness (DT)	Drilling Distance (DD) 3	4	5	6		
16	0.5	0.5	0.5	0.5		
18	0.5	0.5	0.5	0.5		
19	0.5	0.5	0.5	0.5		
20	0.0	0.0	0.0	0.5		
22	1.4	2.4	3.4	0.5		
24	0.5	0.5	0.5	0.5		
26	0.5	0.5	0.5	0.7		
28	0.5	0.5	0.5	0.9		
30	0.5	0.5	1.1	1.1		
	Minimum gap					

Door Overlay

The door overlay is the part of the cabinet side wall or face frame that is covered by the door on the hinge side.

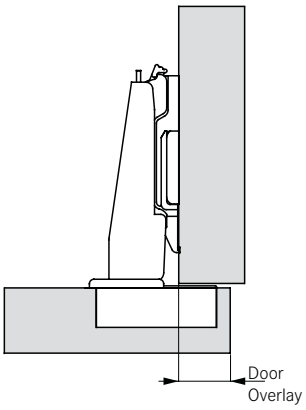

Example:
For a hinge with a cranking of 00, a base plate height (BPH) of 2mm, and a drilling distance (DD) of 4mm, the door overlay is 15mm.

Door Overlay	Drilling Distance (DD) *3	4	5	6	7	
20					0	
19				0		
18			0		2	
17		0		2		
16	0		2		4	
15		2		4		
14	2		4			
13		4				
12	4					
	Base Plate Height (BPH)					

Door Edge Protrusion

The door edge protrusion is the amount by which the edge of the open door protrudes into the opening and varies depending on the type of hinge and method of fixing. It is stated on the respective catalog page and refers to the stated base plate for the factory setting. It can be changed by changing the height of the base plate and adjusting the lateral adjustment.

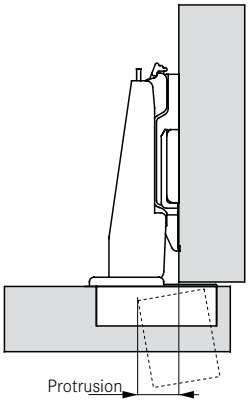

Door Positions

Achieve overlay with hinge cranking

Full Overlay (Cranking 00)

The cup overlay (factory setting) plus drilling distance determine the door overlay. Dimensions can be found in a table on the respective page of the catalog.

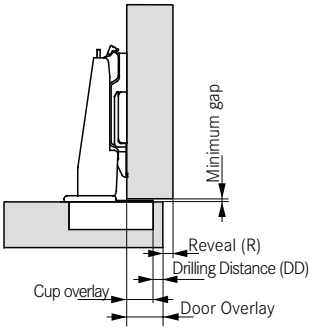

Half Overlay (Cranking 08)

The cup overlay (factory setting) plus drilling distance determine the door overlay. Dimensions can be found in a table on the respective page of the catalog.

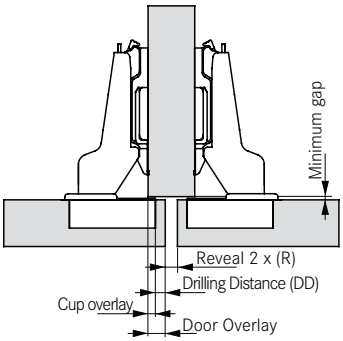

Inset (Cranking 15)

There is no door overlay. The reveal between the side of the cabinet and the door depends on the base plate height (BPH) and the drilling distance (DD). Dimensions can be found in a table on the respective page of the catalog.

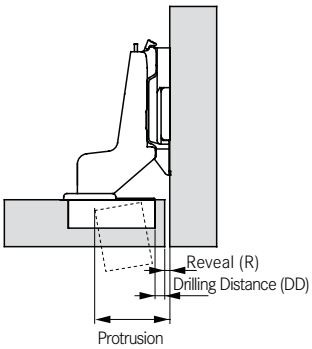

Or Achieve overlay with base plate

Full Overlay

Using a hinge with a cranking of 00 and a base late height (BPH) 00

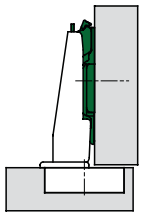

Half Overlay

Using a hinge with a cranking of 00 and a base plate height (BPH) 8.0

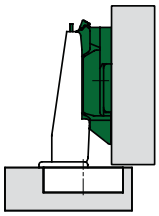

Inset

Using a hinge with a cranking of 00 and a base plate height (BPH) 18

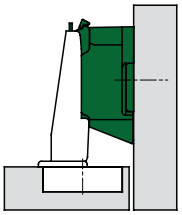

Insertion Instructions

Nexis 85° Reduction Clip

85° Reduction Clip

Description	Material	Item No.	PU
85° angle reduction clip	Black plastic	641.000.10.9862	1000

Note: Nexis 85° Reduction Clip for standard 110° and 125° hinges

PU - Packaging unit

Instructions for 85° Angle Reduction Clip

Begin with hinge in the open position and not mounted on door.

With needle-nosed pliers grip sides of clip.

Insert clip over the roll pin.

Push clip in as you start to close hinge.
Clip will snap into place.

Hinge opening angle is reduced to 85.

Testing Information

Nexis

Functional Test

Static load - vertical

Additional load: 44 pounds (20 kg)

Opening angle: max. -10°

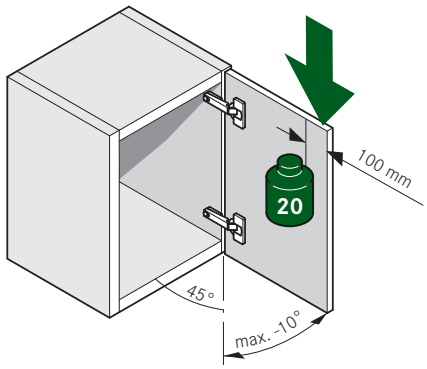

Static load - horizontal

Force: 40 N

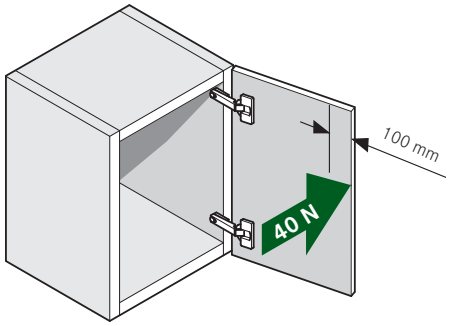

Endurance Test

Opening angle: max. -5°

Open and close movements: 100,000

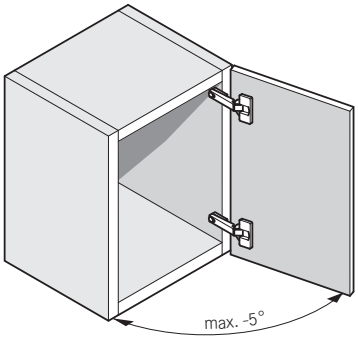

Overload Testing

Vertical

Additional load: 66 pounds (30 kg)

Opening angle: max. -10°

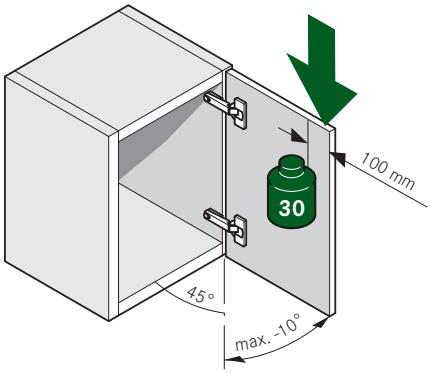

Horizontal

Force: 80 N

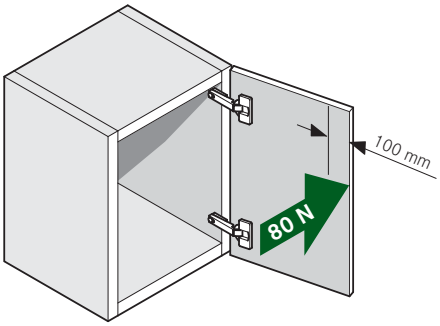

Test door

Weight approx. 11.5 pounds (5.2 kg)

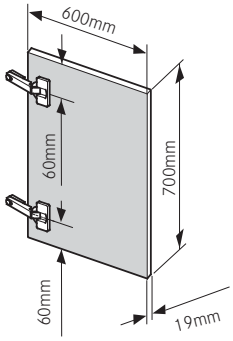

Salt Spray and Humidity Test

Based on DIN ISO 9227 and DIN 6270-2

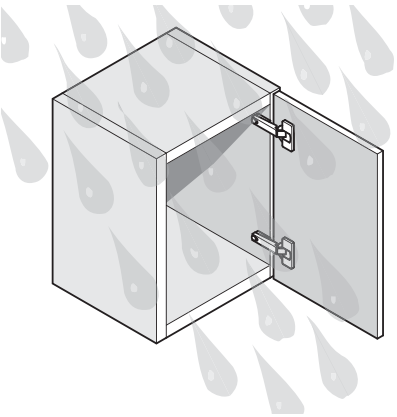

Nexis 110

110° hinge for standard doors

- 3-dimensional adjustment with suitable base plate
- Soft-close compatible
- Shallow cup depth
  - Nexis Impresso 11.5mm
  - Nexis 11mm
- Accommodates overlays up to 20mm (25/32")
- Self-close or free-swing hinges available
- For face frame and frameless cabinets
- Combination drilling pattern for Nexis Impresso

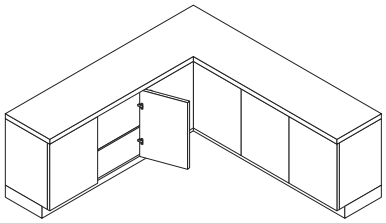

Nexis 110	Opening Angle 110°	Impresso				Screw-On			Dowelled	
Full Overlay	**Cranking 00**	**Pattern**	**Type**	**Item No.**	**PU**	**Pattern**	**Type**	**Item No.**	**Item No.**	**PU**
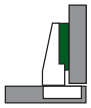	**Nexis Impresso:** Hinge cup: diecast, nickel-plated Hinge arm: steel, nickel-plated **Nexis :** Hinge cup: steel, nickel-plated Hinge arm: steel, nickel-plated	42/45	Self-close	138.622.50.0015	125	42	Self-close	138.322.73.0015	138.322.74.0015	250
		45/48	Self-close	146.622.35.0015	125	45	Self-close	148.322.53.0015	148.322.54.0015	250
						45	Free-swing	147.322.53.0015	147.322.54.0015	250
						48	Self-close	146.322.53.0015	146.322.54.0015	250
Half Overlay	**Cranking 08**	**Pattern**	**Type**	**Item No.**	**PU**	**Pattern**	**Type**	**Item No.**	**Item No.**	**PU**
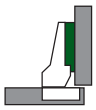	**Nexis Impresso:** Hinge cup: diecast, nickel-plated Hinge arm: steel, nickel-plated **Nexis :** Hinge cup: steel, nickel-plated Hinge arm: steel, nickel-plated	42/45	Self-close	138.622.50.0815	125	42	Self-close	138.322.73.0815	138.322.74.0815	250
		45/48	Self-close	146.622.35.0815	125	45	Self-close	148.322.53.0815	148.322.54.0815	250
						48	Self-close	146.322.53.0815	146.322.54.0815	250
Inset	**Cranking 15**	**Pattern**	**Type**	**Item No.**	**PU**	**Pattern**	**Type**	**Item No.**	**Item No.**	**PU**
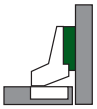	**Nexis Impresso:** Hinge cup: diecast, nickel-plated Hinge arm: steel, nickel-plated **Nexis :** Hinge cup: steel, nickel-plated Hinge arm: steel, nickel-plated	42/45	Self-close	138.604.51.1515	125	42	Self-close	-	138.304.74.1515	250
	Note: Opening angle 100°					45	Self-close	-	148.304.54.1515	250
						48	Self-close	146.304.55.1515	146.304.56.1515	250

Cover Caps	Cranking 00	Item No.	PU
	Steel, nickel-plated	514.300.21.0215	1000
	Black plastic	514.000.22.9662	1000

85° Angle Reduction Clip	Item No.	PU
Black plastic	641.000.10.9862	1000

Cover Caps	Cranking 08 and 15	Item No.	PU
	Black plastic	514.000.22.9662	1000

Wood Screw, Nickel-plated	Item No.	PU
#6 x 5/8" FHP, NI	81001-43	500

PU - Packaging unit

Dimensions in millimeters, fractional inch equivalents as noted.

Full Overlay

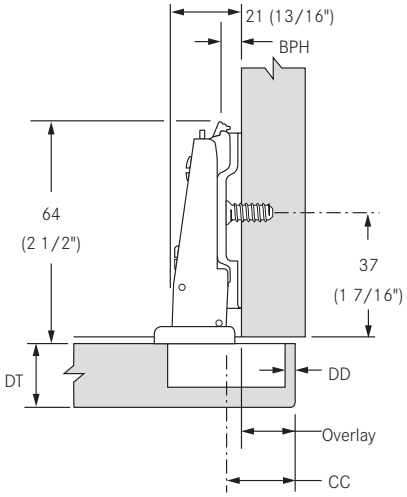

Drawings show Nexis with a base plate, **(BPH) 02**.

Door Overlay \ Drilling Distance (DD)	*3	4	5	6	7
20					0
19				0	
18			0		2
17		0		2	
16	0		2		4
15		2		4	
14	2		4		
13		4			
12	4				
Base Plate Height (BPH)					

Half Overlay

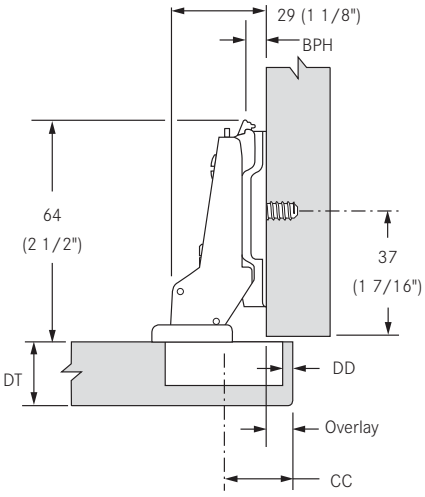

Drawings show Nexis with a base plate, **(BPH) 02**.

Door Overlay \ Drilling Distance (DD)	*3	4	5	6	7
12					0
11				0	
10			0		2
9		0		2	
8	0		2		4
7		2		4	
6	2		4		
5		4			
4	4				
Base Plate Height (BPH)					

Inset

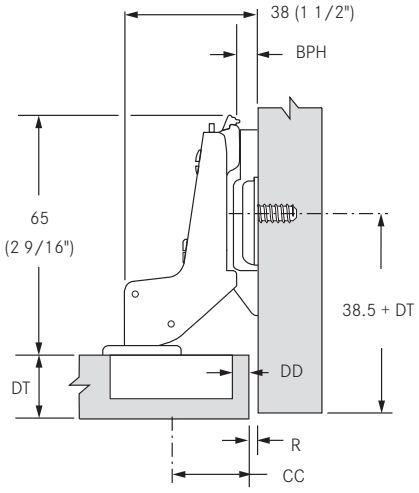

Drawings show Nexis with a base plate, **(BPH) 04**.

Reveal (R) \ Drilling Distance (DD)	*3	4	5	6	7
0		2		4	
1	2		4		
2					
Base Plate Height (BPH)					

Note:
***3mm drilling distance for Nexis only**
A door stop is needed to prevent over close.

Minimum Gaps

Door Thickness (DT) \ Drilling Distance (DD)	*3	4	5	6	7
16	0.5	0.6	1.6	2.6	3.6
18	0.5	1.2	2.2	3.2	4.2
19	0.5	1.5	2.5	3.5	4.5
20	0.8	1.8	2.8	3.8	4.8
22	1.4	2.4	3.4	4.4	5.4
Minimum Gap					

Reveal

Door Thickness (DT) \ Drilling Distance (DD)	*3	4	5	6	7
16	0.5	0.5	0.5	0.5	0.5
18	1.0	1.0	1.0	1.0	1.0
19	1.2	1.2	1.2	1.2	1.2
20	2.2	1.5	1.5	1.5	1.5
22	4.7	3.7	2.8	2.1	2.1
Reveal Min. (R)					

Note: Reveal dimensions were determined with an edge radius (of the door) of 1mm. Hinge dimensions and reveal calculation based on factory setting.

IMPORTANT

To determine the correct application Grass strongly recommends a trial mounting for all hinges and base plates.

Door Thickness (DT) \ Drilling Distance (DD)	*3	4	5	6	7
16	0.6	0.6	0.6	0.6	0.6
18	0.9	0.9	0.9	0.9	0.9
19	1.1	1.1	1.1	1.1	1.1
20	1.4	1.4	1.4	1.4	1.4
22	1.9	1.9	1.9	1.9	1.9
24	2.5	2.5	2.5	2.5	2.5
Reveal Min. (R)					

Legend

BPH = Base Plate Height
CC = Center Cup
DD = Drilling Distance
DT = Door Thickness
R = Reveal

Cup Dimensions

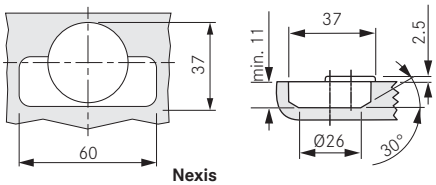

Nexis

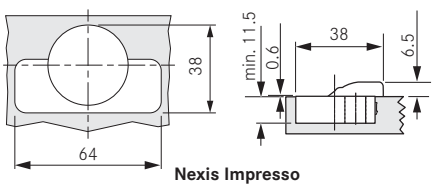

Nexis Impresso

Nexis 125

125° hinge for standard doors

- 3-dimensional adjustment with suitable base plate
- Soft-close compatible
- Accommodates overlays up to 19mm (3/4")
- For door thickness up to 19mm (3/4")
- Alternative solution for wide angle application
- Self-close hinges available
- For face frame and frameless cabinets
- Combination drilling pattern for Nexis Impresso

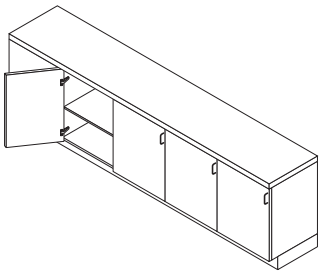

Nexis 125	Opening Angle 125°	Impresso				Screw-On		Dowelled	
Full Overlay	**Cranking 00**	**Pattern**	**Type**	**Item No.**	**PU**	**Pattern**	**Type**	**Item No.**	**Item No.**	**PU**
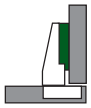	**Nexis Impresso:** Hinge cup: diecast, nickel-plated Hinge arm: steel, nickel-plated **Nexis :** Hinge cup: steel, nickel-plated Hinge arm: steel, nickel-plated	42/45	Self-close	138.629.50.0015	125	42	Self-close	138.329.73.0015	138.329.74.0015	250
		45/48	Self-close	146.629.35.0015	125	45	Self-close	148.329.31.0015	148.329.32.0015	250
						48	Self-close	146.329.55.0015	146.329.56.0015	250

Half Overlay	Cranking 08	Pattern	Type	Item No.	PU	Pattern	Type	Item No.	Item No.	PU
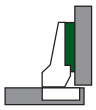	**Nexis Impresso:** Hinge cup: diecast, nickel-plated Hinge arm: steel, nickel-plated **Nexis :** Hinge cup: steel, nickel-plated Hinge arm: steel, nickel-plated					42	Self-close	138.329.73.0815	138.329.74.0815	250
						48	Self-close	146.329.55.0815	-	250

Cover Caps	Cranking 00	Item No.	PU
	Steel, nickel-plated	514.300.21.0215	1000
	Black plastic	514.000.22.9662	1000

85° Angle Reduction Clip	Item No.	PU
Black plastic	641.000.10.9862	1000

Cover Caps	Cranking 08 and 15	Item No.	PU
	Black plastic	514.000.22.9662	1000

Wood Screw, Nickel-plated	Item No.	PU
#6 x 5/8" FHP, NI	81001-43	500

PU - Packaging unit

Dimensions in millimeters, fractional inch equivalents as noted.

Full Overlay

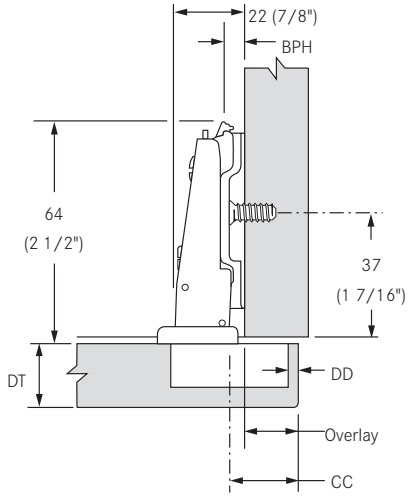

Drawings show Nexis with a base plate, **(BPH) 02**.

Door Overlay \ Drilling Distance (DD)	*3	4	5	6		
19				0		
18			0			
17		0		2		
16	0		2			
15		2		4		
14	2		4			
13		4				
12	4					
	Base Plate Height (BPH)					

Half Overlay

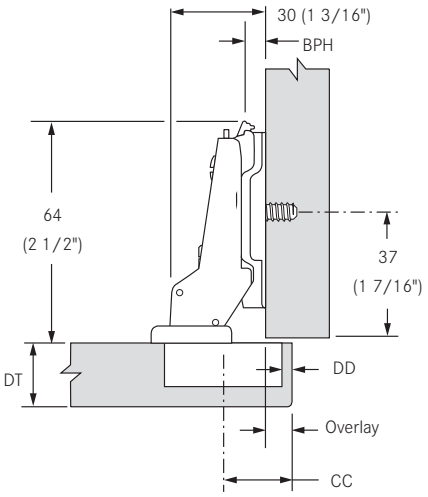

Drawings show Nexis with a base plate, **(BPH) 02**.

Door Overlay \ Drilling Distance (DD)	*3	4	5	6		
9		0		2		
8	0		2			
7		2		4		
6	2		4			
5		4				
4	4					
	Base Plate Height (BPH)					

Note:
***3mm drilling distance for Nexis only**

Minimum Gaps

Door Thickness (DT) \ Drilling Distance (DD)	*3	4	5	6		
16	0.5	0.6	1.6	2.6		
18	1.3	2.1	2.9	3.7		
19	1.9	2.7	3.5	4.3		
20	2.4	3.2	4.0	4.8		
	Minimum Gap					

The minimum gap is the gap between the closed door and the front of the cabinet.

Reveal

Door Thickness (DT) \ Drilling Distance (DD)	*3	4	5	6	
16	1.9	1.9	1.9	1.9	
18	2.8	2.6	2.5	2.5	
19	4.6	3.6	3.0	2.9	
20	6.5	5.5	4.5	3.5	
	Reveal Min. (R)				

Note: Reveal dimensions were determined with an edge radius (of the door) of 1mm. Hinge dimensions and reveal calculation based on factory setting.

IMPORTANT

To determine the correct application Grass strongly recommends a trial mounting for all hinges and base plates.

Legend

BPH = Base Plate Height
CC = Center Cup
DD = Drilling Distance
DT = Door Thickness
R = Reveal

Cup Dimensions

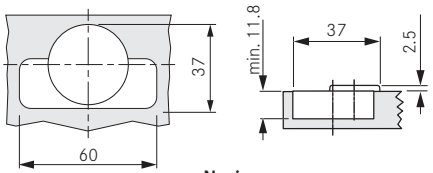

Nexis

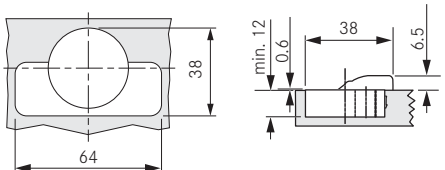

Nexis Impresso

Nexis 170

170° wide-angle hinge

- 3-dimensional adjustment with suitable base plate
- Soft-close compatible
- Accommodates overlays up to 19mm (3/4")
- Shallow cup depth (11mm) for Nexis and Nexis Impresso
- Zero protrusion when door opened 90°
- Finger protection
- Self-close or free-swing hinges available
- For face frame and frameless cabinets
- Combination drilling pattern for Nexis Impresso

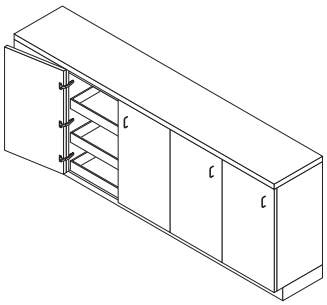

Nexis 170	Opening Angle 170°	Impresso				Screw-On		Dowelled	
Full Overlay	**Cranking 00**	**Pattern**	**Type**	**Item No.**	**PU**	**Pattern**	**Type**	**Item No.**	**Item No.**	**PU**
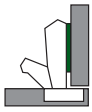	**Nexis Impresso:** Hinge cup: diecast, nickel-plated Hinge arm: diecast, nickel-plated **Nexis :** Hinge cup: diecast, nickel-plated Hinge arm: diecast, nickel-plated	42/45	Self-close	138.765.65.0015	50	42	Self-close	138.765.73.0015	138.765.74.0015	50
		45/48	Self-close	146.765.35.0015	50	45	Self-close	148.765.53.0015	148.765.54.0015	50
						45	Free-swing	147.765.53.0015	-	50
						48	Self-close	146.765.53.0015	146.765.54.0015	50

Half Overlay	Cranking 08	Pattern	Type	Item No.	PU	Pattern	Type	Item No.	Item No.	PU
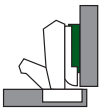	**Nexis Impresso:** Hinge cup: diecast, nickel-plated Hinge arm: diecast, nickel-plated **Nexis :** Hinge cup: diecast, nickel-plated Hinge arm: diecast, nickel-plated	-	-	-	-	42	Self-close	138.765.73.0815	138.765.74.0815	50
		45/48	Self-close	146.765.35.0815	50	45	Self-close	148.765.53.0815	148.765.54.0815	50
						48	Self-close	-	146.765.54.0815	50

120° Angle Reduction Clip		Item No.	PU
	Black plastic. Opening angle reduction to 120°. Prevents doors from bumping with the cabinet side in inset applications and mitered corner applications.	641.000.10.9862	1000

Wood Screw, Nickel-plated		Item No.	PU
	#6 x 5/8" FHP, NI	81001-43	500

Zero Protrusion

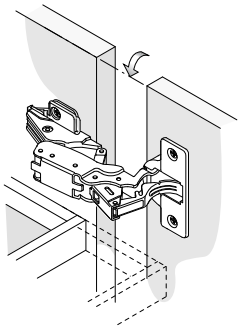

Zero protrusion for application with inset drawers. With 00 cranking and 00 height of base plate the door is flush with the cabinet at 90°.

Special Applications with Angle Reduction Clip

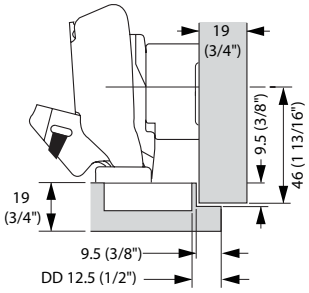

3/8" Lip

Base plate 08
Hinge cranking 08

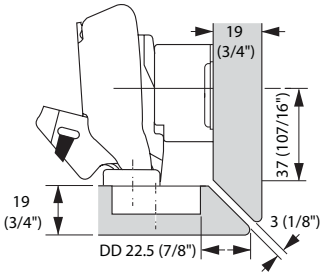

Mitered Corner

Base plate 08
Hinge cranking 08

PU - Packaging unit

Dimensions in millimeters, fractional inch equivalents as noted.

Full Overlay

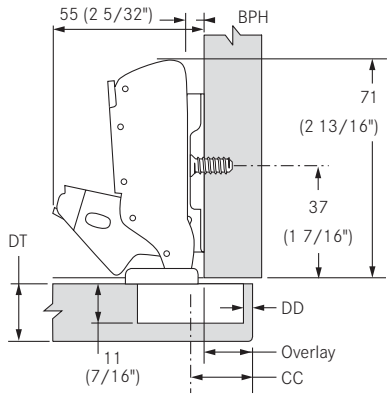

Drawings show Nexis with a base plate, **(BPH) 02**.

Door Overlay \ Drilling Distance (DD)	3	4	5	6	7	8
21						0
20					0	
19				0		2
18			0		2	
17		0		2		4
16	0		2		4	
15		2		4		
14	2		4			
13		4				
12	4					
Base Plate Height (BPH)						

Half Overlay

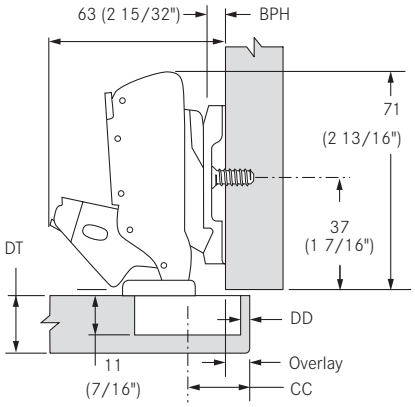

Drawings show Nexis with a base plate, **(BPH) 02**.

Door Overlay \ Drilling Distance (DD)	3	4	5	6	7	8
13						0
12					0	
11				0		2
10			0		2	
9		0		2		4
8	0		2		4	
7		2		4		
6	2		4			
5		4				
Base Plate Height (BPH)						

Inset

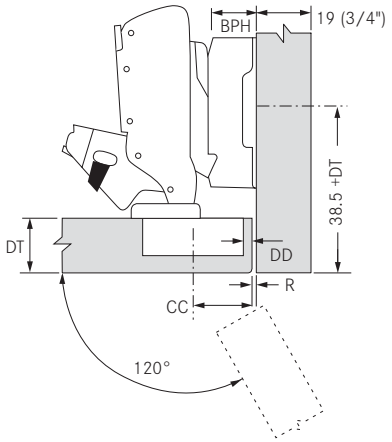

Drawings show Nexis with a base plate, **(BPH) 08**. and angle reduction clip

Reveal (R) \ Drilling Distance (DD)	3	4	5	6	
0	8				
1		8			
2			8		
3				8	
Base Plate Height (BPH)					

Note:
Drilling distance 3mm for Nexis and Nexis Impresso
A door stop is needed to prevent over close.

Minimum Gaps

Door Thickness (DT) \ Drilling Distance (DD)	3	4	5	6	8	10
16	0.7	0.7	0.7	0.7	0.7	0.7
18	0.7	0.7	0.7	0.7	0.7	0.7
19	0.7	0.7	0.7	0.7	0.7	0.7
20	0.7	0.7	0.7	0.7	0.7	0.7
22	0.7	0.7	0.7	0.7	0.7	0.7
23	0.7	0.7	0.7	0.7	0.7	0.7
24	0.7	0.7	0.7	0.7	0.7	0.7
25	0.7	0.7	0.7	0.7	0.7	0.7
26	0.7	0.7	0.7	0.7	0.7	0.7
Minimum Gap						

The minimum gap is the gap between the closed door and the front of the cabinet.

Reveal

Door Thickness (DT) \ Drilling Distance (DD)	3	4	5	6	7	8
16	0.0	0.0	0.0	0.0	0.0	0.0
18	0.0	0.0	0.0	0.0	0.0	0.0
19	0.0	0.0	0.0	0.0	0.0	0.0
20	0.0	0.0	0.0	0.0	0.0	0.0
22	0.0	0.0	0.0	0.0	0.0	0.0
23	0.0	0.0	0.0	0.0	0.0	0.0
24	0.0	0.0	0.0	0.5	1.8	2.0
25	6.5	6.5	6.0	5.5	4.8	6.5
26	10.5	9.5	8.5	7.5	6.5	5.5
Reveal Min. (R)						

Note: Reveal dimensions were determined with an edge radius (of the door) of 1mm. Hinge dimensions and reveal calculation based on factory setting.

IMPORTANT

To determine the correct application Grass strongly recommends a trial mounting for all hinges and base plates.

Legend

BPH = Base Plate Height
CC = Center Cup
DD = Drilling Distance
DT = Door Thickness
R = Reveal

Cup Dimensions

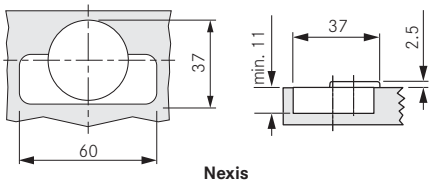

Nexis

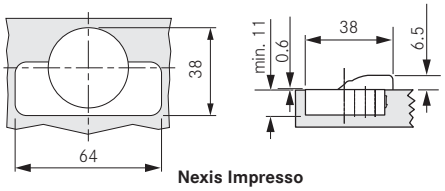

Nexis Impresso

Nexis 95

95° hinge for thick or profile doors

- 3-dimensional adjustment with suitable base plate
- Soft-close compatible
- Accommodates overlays up to 19mm (3/4")
- Minimal gap dimensions on thick doors
- For door thickness up to 30mm (1 3/16")
- Self-close or free-swing hinges available
- For face frame and frameless cabinets

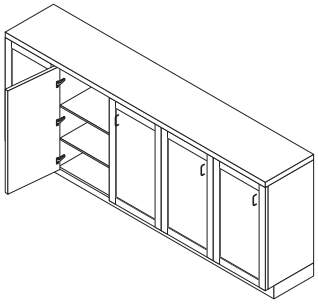

Nexis 95	Opening Angle 95°	Screw-On

Full Overlay	Cranking 00	Pattern	Type	Item No.	PU
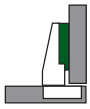	Hinge cup: steel, nickel-plated Hinge arm: steel, nickel-plated	42	Self-close	138.305.73.0015	250
		45	Self-close	148.305.53.0015	250
		48	Self-close	146.305.53.0015	250

Half Overlay	Cranking 08	Pattern	Type	Item No.	PU
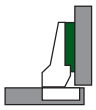	Hinge cup: steel, nickel-plated Hinge arm: steel, nickel-plated	48	Self-close	146.305.53.0815	250
		48	Free-swing	145.305.53.0815	250

Inset	Cranking 15	Pattern	Type	Item No.	PU
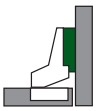	Hinge cup: steel, nickel-plated Hinge arm: steel, nickel-plated	42	Self-close	138.305.73.1515	250
		48	Self-close	146.305.53.1515	250

Cover Caps	Cranking 00	Item No.	PU
	Steel, nickel-plated	514.300.21.0215	1000
	Black plastic	514.000.22.9662	1000

Cover Caps	Cranking 08 and 15	Item No.	PU
	Black plastic	514.000.22.9662	1000

Wood Screw, Nickel-plated	Item No.	PU
#6 x 5/8" FHP, NI	81001-43	500

PU - Packaging unit

Dimensions in millimeters, fractional inch equivalents as noted.

Full Overlay

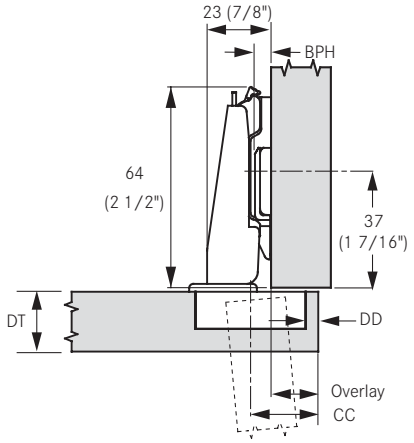

Drawings show Nexis with a base plate, **(BPH) 02**.

Drilling Distance (DD)

Door Overlay	*3	4	5	6	
19				0	
18			0		
17		0		2	
16	0		2		
15		2		4	
14	2		4		
13		4			
12	4				
	Base Plate Height (BPH)				

Half Overlay

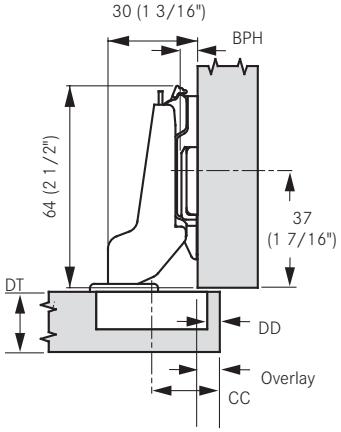

Drawings show Nexis with a base plate, **(BPH) 02**.

Drilling Distance (DD)

Door Overlay	*3	4	5	6	
11				0	
10			0		
9		0		2	
8	0		2		
7		2		4	
6	2		4		
5		4			
4	4				
	Base Plate Height (BPH)				

Inset

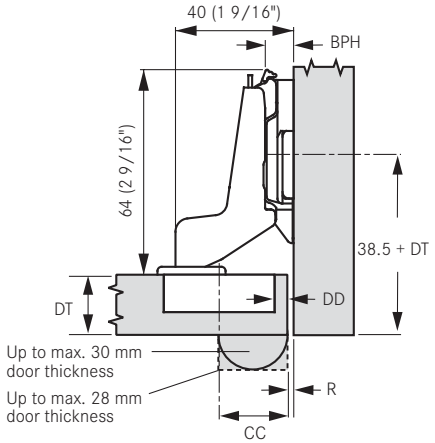

Drawings show Nexis with a base plate, **(BPH) 04**.

Drilling Distance (DD)

Reveal (R)	*3	4	5	6	
0		2		4	
1	2		4		
2		4			
	Base Plate Height (BPH)				

Note:
***3mm drilling distance for Nexis only**
A door stop is needed to prevent over close.

Minimum Gaps

Drilling Distance (DD)

Door Thickness (DT)	3	4	5	6	
16	0.5	0.5	0.5	0.5	
18	0.5	0.5	0.5	0.5	
19	0.5	0.5	0.5	0.5	
20	0.5	0.5	0.5	0.5	
22	0.5	0.5	0.5	0.5	
23	0.5	0.5	0.5	0.5	
24	0.5	0.5	0.5	0.5	
26	0.5	0.5	0.5	0.7	
28	0.5	0.5	0.5	0.9	
30	0.5	0.5	1.1	1.1	
	Minimum Gap				

The minimum gap is the gap between the closed door and the front of the cabinet.

Reveal

Drilling Distance (DD)

Door Thickness (DT)	3	4	5	6	
16	0.1	0.1	0.1	0.1	
18	0.2	0.2	0.2	0.2	
19	0.3	0.3	0.3	0.3	
20	0.4	0.4	0.4	0.4	
22	0.7	0.7	0.7	0.7	
24	1.0	1.0	1.0	1.0	
26	1.4	1.4	1.4	1.4	
28	1.9	1.9	1.9	1.9	
30	3.8	2.9	2.6	2.5	
	Reveal Min. (R)				

Note: Reveal dimensions were determined with an edge radius (of the door) of 1mm. Hinge dimensions and reveal calculation based on factory setting.

IMPORTANT

To determine the correct application Grass strongly recommends a trial mounting for all hinges and base plates.

Legend

BPH = Base Plate Height
CC = Center Cup
DD = Drilling Distance
DT = Door Thickness
R = Reveal

Cup Dimensions

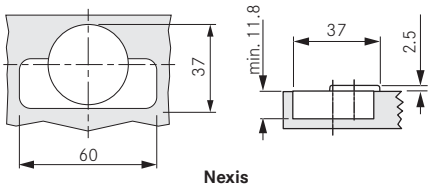

Nexis

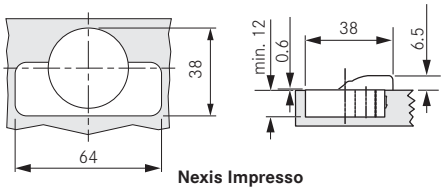

Nexis Impresso

Nexis 95/40

95° hinge with 40mm cup for profile doors

- 3-dimensional adjustment with suitable base plate
- Accommodates door overlays up to 23mm (7/8")
- Minimal gap dimensions on thick doors
- Excellent weight capacity for heavy profile doors
- For profile or frame doors up to 36mm thick
- Special spring mechanism ensures excellent closing force - even with large doors
- Self-close hinges available
- For face frame and frameless cabinets

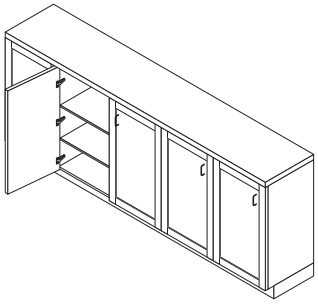

Nexis 95/40 Opening Angle 95° — Screw-On

Full overlay	Cranking 00	Pattern	Type	Item No.	PU
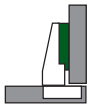	Hinge cup: steel, nickel-plated; Hinge arm: steel, nickel-plated	48	Self-close	146.425.53.0015	125

Half overlay	Cranking 08	Pattern	Type	Item No.	PU
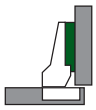	Hinge cup: steel, nickel-plated; Hinge arm: steel, nickel-plated	48	Self-close	146.425.53.0815	125

Inset	Cranking 15	Pattern	Type	Item No.	PU
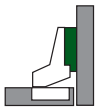	Hinge cup: steel, nickel-plated; Hinge arm: steel, nickel-plated	48	Self-close	146.425.53.1515	125

Cover Caps	Cranking 00	Item No.	PU
	Steel, nickel-plated	514.300.21.0215	1000
	Black plastic	514.000.22.9662	1000

Cover Caps	Cranking 08 and 15	Item No.	PU
	Black plastic	514.000.22.9662	1000

Wood Screw, Nickel-plated		Item No.	PU
	#6 x 5/8" FHP, NI	81001-43	500

PU - Packaging unit

Dimensions in millimeters, fractional inch equivalents as noted.

Full Overlay

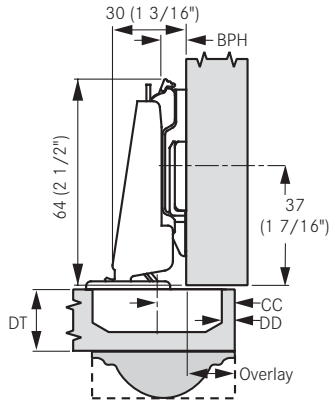

Drawings show Nexis with a base plate, **(BPH) 02**.

Door Overlay \ Drilling Distance (DD)	3	4	5	6	7	8	9	10	11
23								0	
22							0		2
21						0		2	
20					0		2		4
19				0		2		4	
18			0		2		4		
17		0		2		4			
16	0		2		4				
15		2		4					
14	2		4						
13		4							
	Base Plate Height (BPH)								

Half Overlay

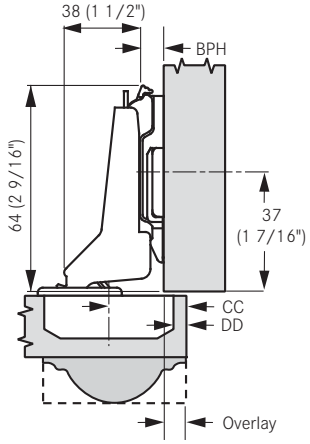

Drawings show Nexis with a base plate, **(BPH) 02**.

Door Overlay \ Drilling Distance (DD)	3	4	5	6	7	8	9	10	11
15								0	
14							0		2
13						0		2	
12					0		2		4
11				0		2		4	
10			0		2		4		
9		0		2		4			
8	0		2		4				
7		2		4					
6	2		4						
5		4							
	Base Plate Height (BPH)								

Inset

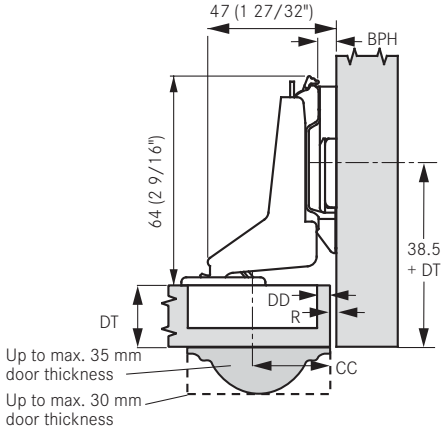

Drawings show Nexis with a base plate, **(BPH) 04**.

Reveal (R) \ Drilling Distance (DD)	3	4	5	6	
0		2		4	
1	2		4		
2		4			
	Base Plate Height (BPH)				

Note:
A door stop is needed to prevent over close.

Minimum Gaps

Door Thickness (DT) \ Drilling Distance (DD)	3-10			
20	0.0	0.0	0.0	0.0
22	0.0	0.0	0.0	0.0
23	0.0	0.0	0.0	0.0
24	0.0	0.0	0.0	0.0
26	0.0	0.0	0.0	0.0
28	0.0	0.0	0.0	0.0
30	0.0	0.0	0.0	0.0
32	0.0	0.0	0.0	0.0
34	0.0	0.0	0.0	0.0
36	0.0	0.0	0.0	0.0
	Minimum Gap			

The minimum gap is the gap between the closed door and the front of the cabinet.

Reveal

Door Thickness (DT) \ Drilling Distance (DD)	3	4	5	6	8	10
20	0.1	0.1	0.1	0.1	0.1	0.1
22	0.2	0.2	0.2	0.2	0.2	0.2
24	0.3	0.3	0.3	0.3	0.3	0.3
26	0.4	0.4	0.4	0.4	0.4	0.4
28	0.6	0.6	0.6	0.6	0.6	0.6
30	0.8	0.8	0.8	0.8	0.8	0.8
32	2.1	1.1	1.1	1.1	1.1	1.1
34	4.2	3.1	2.3	1.6	1.4	1.4
36	6.5	5.2	4.2	3.5	2.2	1.7
	Reveal Min. (R)					

Note: Reveal dimensions were determined with an edge radius (of the door) of 1mm. Hinge dimensions and reveal calculation based on factory setting.

IMPORTANT

To determine the correct application Grass strongly recommends a trial mounting for all hinges and base plates.

Legend

BPH = Base Plate Height
CC = Center Cup
DD = Drilling Distance
DT = Door Thickness
R = Reveal

Cup Dimensions

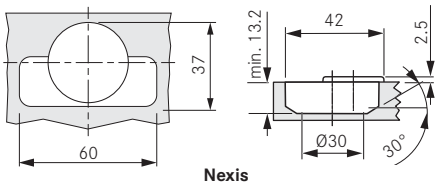

Nexis

Nexis 95/+45°

+45° angle corner cabinet hinge

- 3-dimensional adjustment with suitable base plate
- Soft-close compatible
- Minimal gap dimensions on door thickness of up to 30mm
- For 45° angle corner cabinets
- Self-close hinges available
- Combination drilling pattern for Nexis Impresso

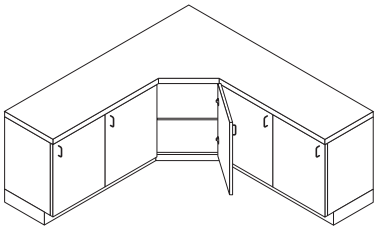

+45° Angle	Opening Angle 95°	Impresso				Screw-On		Dowelled	
Inset		Pattern	Type	Item No.	PU	Pattern	Type	Item No.	Item No.	PU
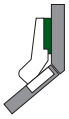	**Nexis Impresso:** Hinge cup: diecast, nickel-plated Hinge arm: diecast, nickel-plated **Nexis :** Hinge cup: steel, nickel-plated Hinge arm: diecast, nickel-plated	42/45	Self-close	-		45	Self-close	148.405.06.0315	148.405.08.0315	125
		45/48	Self-close	146.705.35.0315	125	48	Self-close	146.405.53.0315	146.405.54.0315	125

Cover Caps	Cranking 08 and 15	Item No.	PU
	Black plastic	514.000.22.9662	1000

Wood Screw, Nickel-plated		Item No.	PU
	#6 x 5/8" FHP, NI	81001-43	500

PU - Packaging unit

Dimensions in millimeters, fractional inch equivalents as noted.

Corner Angle

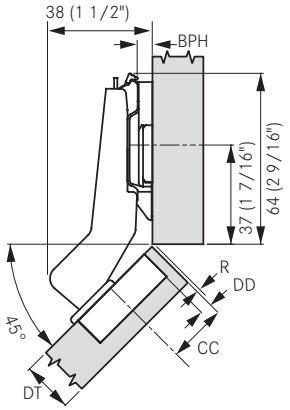

Drawings show Nexis with a base plate, **(BPH) 04**.

Drilling Distance (DD)

*3	4	5	6	
	2		4	
Base Plate Height (BPH)				

Inset

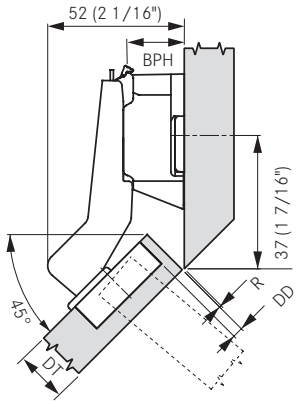

Drawings show Nexis with a base plate, **(BPH) 18**.

Minimum Gaps

Drilling Distance (DD)

Door Thickness (DT)	3	4	5	6	
16	0.5	0.5	0.5	0.5	
18	0.5	0.5	0.5	0.5	
19	0.5	0.5	0.5	0.5	
20	0.5	0.5	0.5	0.5	
22	0.5	0.5	0.5	0.5	
23	0.5	0.5	0.5	0.5	
24	0.5	0.5	0.5	0.5	
26	0.5	0.5	0.5	0.7	
28	0.5	0.5	0.5	0.9	
30	0.5	0.5	1.1	1.1	
	Minimum Gap				

The minimum gap is the gap between the closed door and the front of the cabinet.

Reveal

Drilling Distance (DD)

Door Thickness (DT)	3	4	5	6
16	0.1	0.1	0.1	0.1
18	0.2	0.2	0.2	0.2
19	0.3	0.3	0.3	0.3
20	0.4	0.4	0.4	0.4
22	0.7	0.7	0.7	0.7
24	1.0	1.0	1.0	1.0
26	1.4	1.4	1.4	1.4
28	1.9	1.9	1.9	1.9
30	3.8	2.9	2.6	2.5
	Reveal Min. (R)			

Note: Reveal dimensions were determined with an edge radius (of the door) of 1mm. Hinge dimensions and reveal calculation based on factory setting.

IMPORTANT To determine the correct application Grass strongly recommends a trial mounting for all hinges and base plates.

Legend

BPH = Base Plate Height
CC = Center Cup
DD = Drilling Distance
DT = Door Thickness
R = Reveal

Cup Dimensions

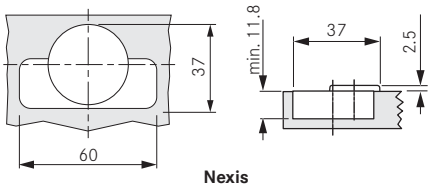

Nexis

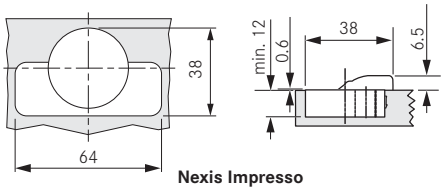

Nexis Impresso

Nexis 125/-45°

-45° angle corner cabinet hinge, for half overlay doors

- 3-dimensional adjustment with suitable base plate
- For 45° negative angle corner cabinets
- Self-close hinges available

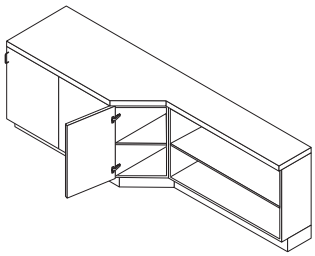

-45° Angle	Opening Angle 125°		Screw-On	Dowelled
Half overlay		**Pattern**	**Type**	**Item No.**	**Item No.**	**PU**
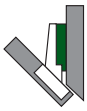	**Nexis :** Hinge cup: steel, nickel-plated; Hinge arm: diecast, nickel-plated	45	Self-close	-	148.429.54.4515	125
		48	Self-close	146.429.53.4515	-	125

Cover Caps	Cranking 08 and 15	Item No.	PU
	Black plastic	514.000.22.9662	1000

Wood Screw, Nickel-plated	Item No.	PU
#6 x 5/8" FHP, NI	81001-43	500

PU - Packaging unit

Dimensions in millimeters, fractional inch equivalents as noted.

Half Overlay

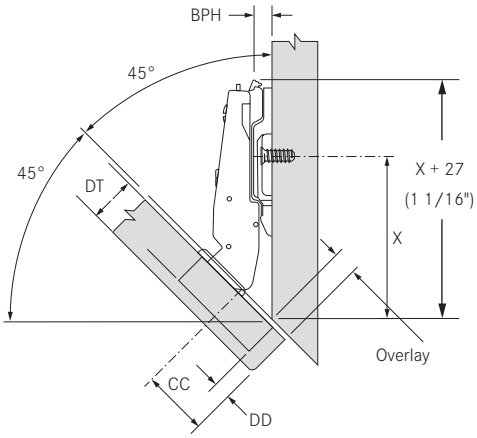

Door Overlay \ Drilling Distance (DD)	3	4	5	6	
12				0	
11			0		
10		0		2	
9	0		2		
8		2		4	
7	2		4		
6		4			
5	4				
	Base Plate Height (BPH)				

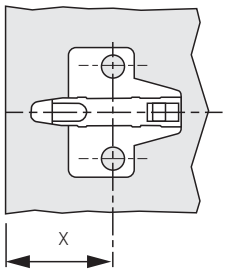

x = 55.0 with base plate, height 00
x = 57.0 with base plate, height 02
x = 59.0 with base plate, height 04

Minimum Gaps

Door Thickness (DT) \ Drilling Distance (DD)	3	4	5	6	
16	0.5	1.0	1.8	2.6	
18	1.3	2.1	2.9	3.7	
19	1.9	2.7	3.5	4.3	
20	2.4	3.2	4.0	4.8	
	Minimum Gap				

The minimum gap is the gap between the closed door and the front of the cabinet.

IMPORTANT
To determine the correct application Grass strongly recommends a trial mounting for all hinges and base plates.

Legend

BPH = Base Plate Height
CC = Center Cup
DD = Drilling Distance
DT = Door Thickness
R = Reveal

Cup Dimensions

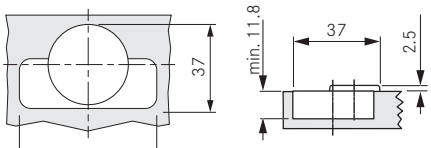

Nexis

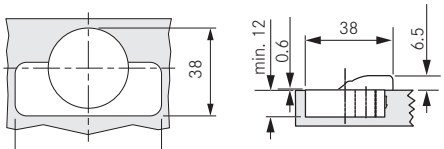

Nexis Impresso

Nexis 95/90°

95° post hinge for blind corner cabinet

- 3-dimensional adjustment with suitable base plate
- Soft-close compatible
- Minimal gap dimensions on door thickness of up to 30mm
- Self-close hinges available
- For blind corner cabinets

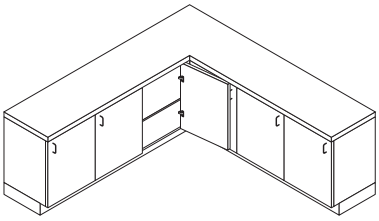

Blind Corner	Opening Angle 95°	Screw-On	Dowelled

Inset		Pattern	Type	Item No.	Item No.	PU
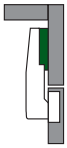	Hinge cup: steel, nickel-plated Hinge arm: diecast, nickel-plated	45	Self-close	148.405.11.9615	148.405.12.9615	125
		48	Self-close	-	146.405.54.9615	125

Overlay		Pattern	Type	Item No.	Item No.	PU
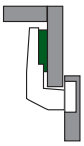	Hinge cup: steel, nickel-plated Hinge arm: diecast, nickel-plated	45	Self-close	148.405.53.1915	148.405.54.1915	125

Cover Caps	Cranking 08 and 15	Item No.	PU
	Black plastic	514.000.22.9662	1000

Wood Screw, Nickel-plated		Item No.	PU
	#6 x 5/8" FHP, NI	81001-43	500

PU - Packaging unit

Dimensions in millimeters, fractional inch equivalents as noted.

Inset

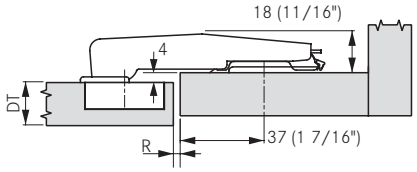

Drawings show Nexis with a base plate, **(BPH) 00**.

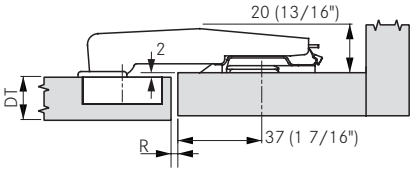

Drawings show Nexis with a base plate, **(BPH) 02**.

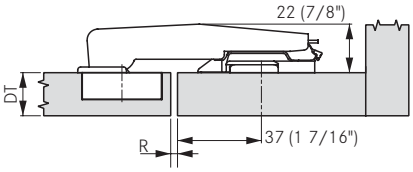

Drawings show Nexis with a base plate, **(BPH) 04**.

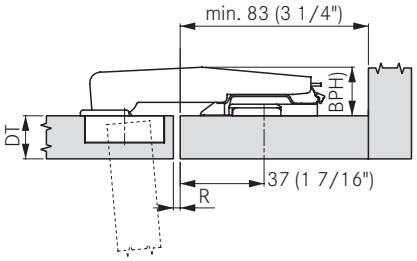

Door Thickness (DT)	Drilling Distance (DD) *3	4	5	6
16	0.1	0.1	0.1	0.1
18	0.2	0.2	0.2	0.2
19	0.3	0.3	0.3	0.3
20	0.4	0.4	0.4	0.4
22	0.7	0.7	0.7	0.7
24	1.0	1.0	1.0	1.0
26	1.4	1.4	1.4	1.4
28	1.9	1.9	1.9	1.9
30	3.8	2.9	2.6	2.5
	Reveal Min. (R)			

Note:
***3mm drilling distance for Nexis only**
A door stop is needed to prevent over close.

Note: Reveal dimensions were determined with an edge radius (of the door) of 1mm. Hinge dimensions and reveal calculation based on factory setting.

IMPORTANT

To determine the correct application Grass strongly recommends a trial mounting for all hinges and base plates.

Overlay

Drilling Distance (DD)	Door Overlay
3	14
4	15
5	16
6	17

Post Thickness (S)	Base Plate Height (BPH)
19	0
17	2
15	4

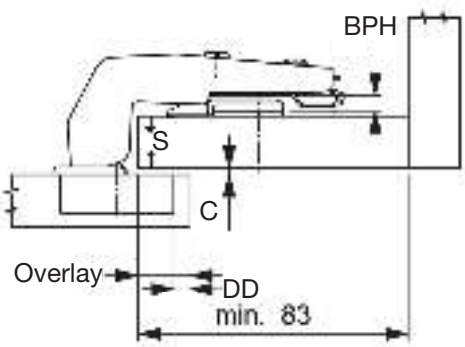

Note: Hinge dimensions with factory setting.

Legend

BPH = Base Plate Height
CC = Center Cup
DD = Drilling Distance
DT = Door Thickness
R = Reveal
S = Post Thickness

Cup Dimensions

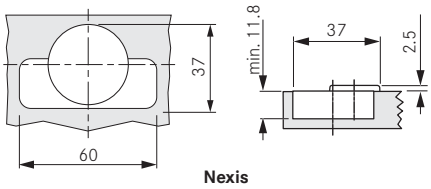

Nexis

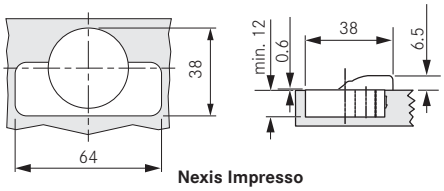

Nexis Impresso

Subject to technical modifications without notice

Nexis PCC

Pie-cut corner hinge

- 3-dimensional adjustment with suitable base plate
- Designed for connecting two folding doors in corner cabinet
- For door thicknesses 16 to 22mm
- Self-close hinges available
- Used in conjunction with Nexis 170 hinges

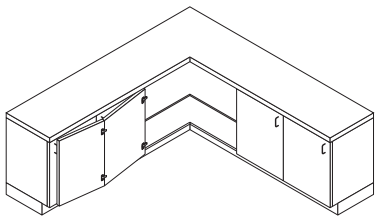

Pie-cut Corner Hinge			Screw-On	Dowelled	
		Pattern	Type	Item No.	Item No.	PU
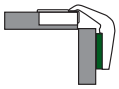	**Nexis :** Hinge cup: diecast, nickel-plated; Hinge arm: diecast, nickel-plated	45	Self-close	148.700.01.0015	148.700.02.0015	125
		48	Self-close	146.700.01.0015	146.700.02.0015	125

Cover Caps	Cranking 08 and 15	Item No.	PU
	Black plastic	514.000.22.9662	1000

Wood Screw, Nickel-plated		Item No.	PU
	#6 x 5/8" FHP, NI	81001-43	500

PU - Packaging unit

Dimensions in millimeters, fractional inch equivalents as noted.

Hinge Application

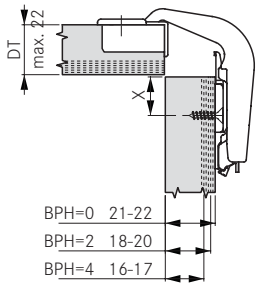

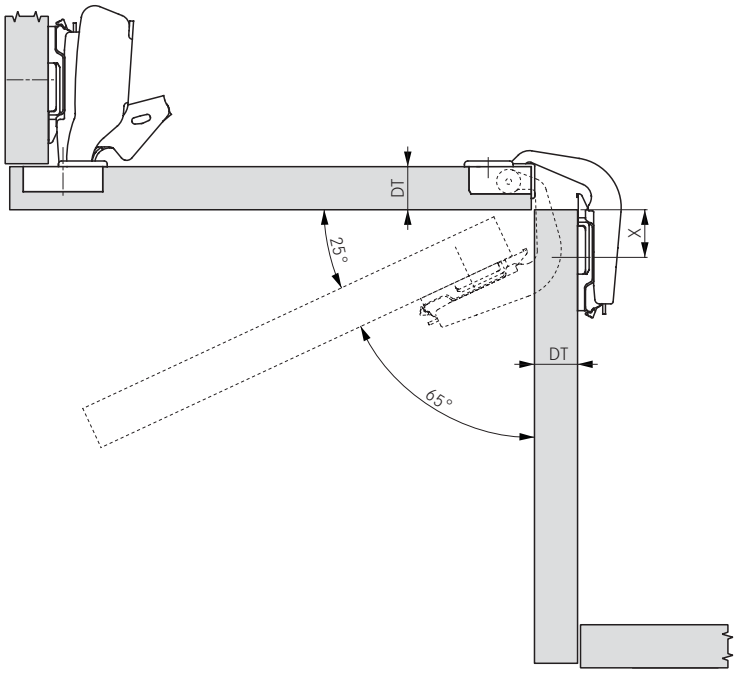

Drawings show Nexis with a base plate, **(BPH) 02**.

Note: Reveal dimensions were determined with an edge radius (of the door) of 1mm. Hinge dimensions and reveal calculation based on factory setting.

Door thickness (DT)	16	17	18	19	20	21	22
Distance (X)	25	24	22	21	20	18	17
Base Plate Height (BPH)	04		02			00	

IMPORTANT

To determine the correct application Grass strongly recommends a trial mounting for all hinges and base plates.

Legend

BPH = Base Plate Height
CC = Center Cup
DD = Drilling Distance
DT = Door Thickness
R = Reveal
X = Distance

Cup Dimensions

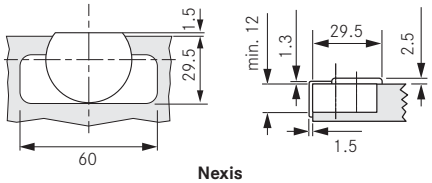

Nexis

Nexis 21 PCC

Pie-cut corner hinge with full cup recess

- 3-dimensional adjustment with suitable base plate
- Designed for folding doors in corner cabinets
- For door thicknesses Max. 24mm, factory setting 19mm door thickness with 4mm drilling distance
- Self-close hinges available
- Used in conjunction with Nexis 170 hinges
- Shallow cup depth of 10.8mm

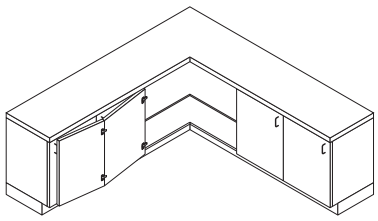

Nexis 21 Piecut Corner Hinge			Screw-On	Dowelled
	Pattern	Type	Item No.	Item No.	PU
	42	Self-close	70139-10	70140-10	125
	42	Self-close	70139-06	70140-06	25
	45	Self-close	-	**F015**135**477**225	125

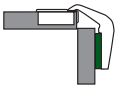

Nexis :
Hinge cup: steel, nickel-plated;
Hinge arm: diecast, nickel-plated

Base Plates for PCC — Cam Base Plate, 2-Point Fixing

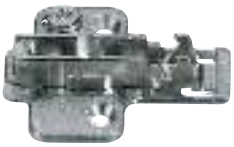

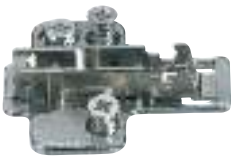

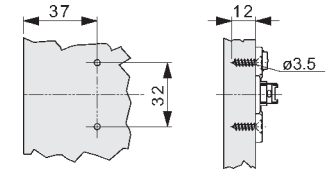

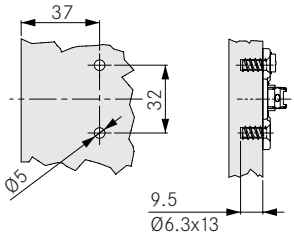

Door Thickness	Screws	Height	Item No.	PU
18mm-24mm	For wood screws	00	314.493.71.0015	250
14mm-17mm	For wood screws	02	314.493.71.0215	250
18mm-24mm	With pre-mounted Euro screws	00	318.493.71.0015	250
14mm-17mm	With pre-mounted Euro screws	02	318.493.71.0215	250

Cover Caps	Cranking 08 and 15	Item No.	PU
	Black plastic	514.000.22.9662	1000

Wood Screw, Nickel-plated	Item No.	PU
#6 x 5/8" FHP, NI	81001-43	500

PU - Packaging unit

Dimensions in millimeters, fractional inch equivalents as noted.

Hinge Application

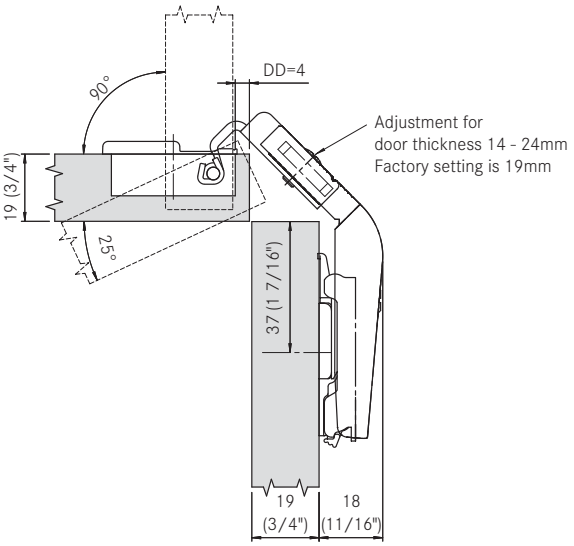

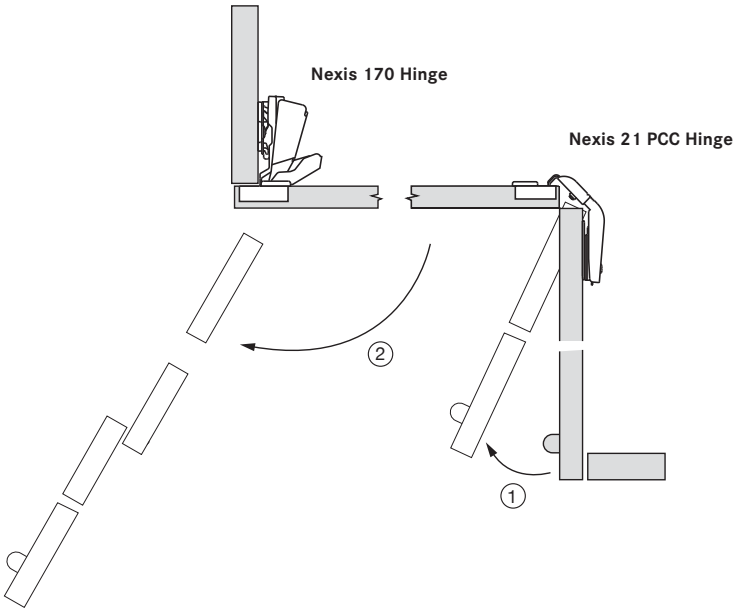

Drawings show Nexis with a base plate, **(BPH) 00**
for door thickness 19mm, Factory setting.
Drilling distance range 3mm - 6mm

Adjustment

Adjustment in the hinge arm

1. Side adjustment ±2mm
2. Depth adjustment ±2mm
4. door thickness 14 to 24mm, factory setting 19mm

Adjustment via base plate

3. Height adjustment ±2mm

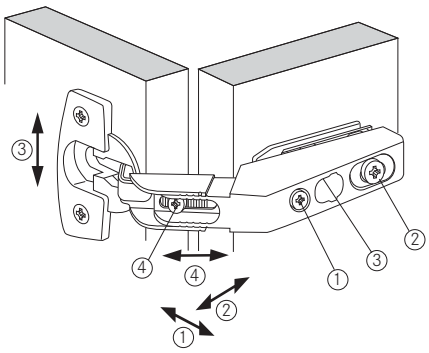

IMPORTANT

To determine the correct application Grass strongly recommends a trial mounting for all hinges and base plates.

Legend

BPH = Base Plate Height
CC = Center Cup
DD = Drilling Distance
DT = Door Thickness
R = Reveal

Cup Dimensions

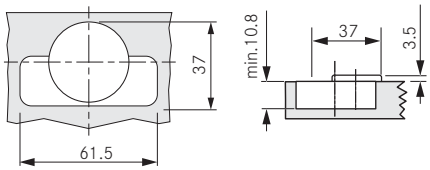

Nexis 17 GL

95° glass door hinge

- 3-dimensional adjustment with suitable base plate
- Glass door hinge, 26mm cup diameter
- For glass thickness 4 to 6mm
- Self-close hinges available

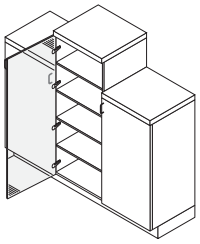

17 GL — Opening Angle 95°

Overlay	Cranking 00	Pattern	Type	Item No.	PU
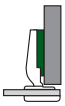	Hinge cup: black plastic; Hinge arm: steel, nickel-plated	48	Self-close	146.017.93.0084	250

Note: product lead time approximately 8 weeks.

Half Overlay	Cranking 08	Pattern	Type	Item No.	PU
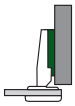	Hinge cup: black plastic; Hinge arm: steel, nickel-plated	48	Self-close	146.117.93.0884	250

Note: product lead time approximately 8 weeks.

Decorative Cover Caps

Description	Color	Item No.	PU
Oblong Cover Cap	nickel, velour	359.000.81.1016	25
Oblong Cover Cap	nickel, textured	359.000.81.1019	25
Oblong Cover Cap	brass, textured	359.000.81.1035	25

Description	Color	Item No.	PU
Round Cover Cap	brass, textured	359.000.81.1635	25

Note: product lead time approximately 8 weeks.

Cover Caps	Cranking 00 and 08	Item No.	PU
	Black plastic	514.000.22.9662	1000

Wood Screw, Nickel-plated		Item No.	PU
	#6 x 5/8" FHP, NI	81001-43	500

PU - Packaging unit

Dimensions in millimeters, fractional inch equivalents as noted.

Full Overlay

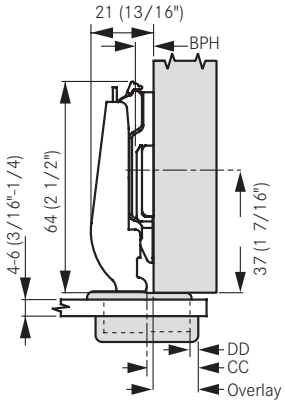

Drawings show Nexis with a base plate, **(BPH) 02**.

Drilling Distance (DD)

Door Overlay	4	5	6		
19			0		
18		0			
17	0		2		
16		2			
15	2		4		
14		4			
13	4				
	Base Plate Height (BPH)				

Half Overlay

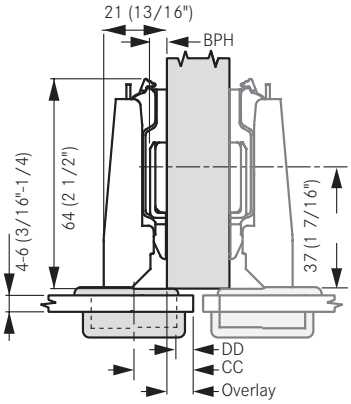

Drawings show Nexis with a base plate, **(BPH) 02**.

Drilling Distance (DD)

Door Overlay	4	5	6		
11			0		
10		0			
9	0		2		
8		2			
7	2		4		
6		4			
5	4				
4					
	Base Plate Height (BPH)				

Assembly

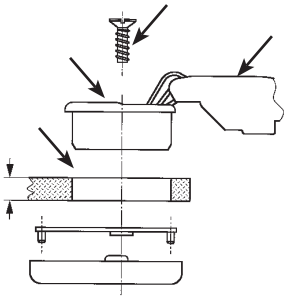

For 1 door order separately:

- 2 Hinges
- 2 Base plates
- 2 Cover plates (oblong/round)

IMPORTANT

To determine the correct application Grass strongly recommends a trial mounting for all hinges and base plates.

Legend

BPH = Base Plate Height
CC = Center Cup
DD = Drilling Distance
DT = Door Thickness
R = Reveal

Cup Dimensions

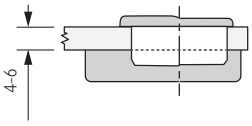

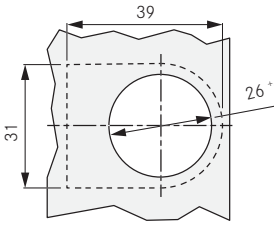

Oblong

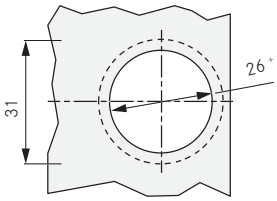

Round

Base Plates

Nexis

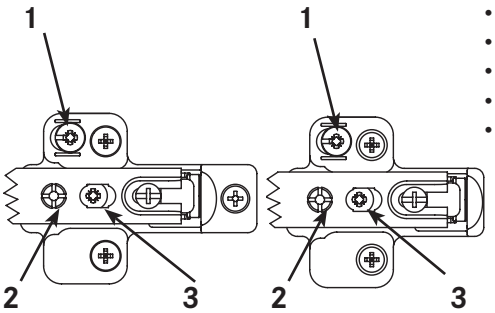

- Steel, nickel plated
- Depth and height adjustment via eccentric cam
- Side adjustment via hinge
- Use a #2 Pozi drive screwdriver for hinge adjustment
- Attach base plates using all available screw holes

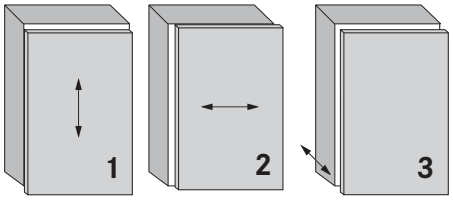

Height adjustment ± 2mm | Side Adjustment +1/-3mm | Depth adjustment +3/-1mm

All adjustment options can be made independently of one another

Cam Base Plate, 3 Point Fixing — For Wood Screw

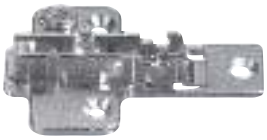

- Height adjustment via eccentric cam

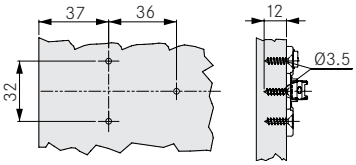

Height	Item No.	PU
00	314.493.70.0015	250
02	314.493.70.0215	250
04	314.493.70.0415	250
08	314.493.70.0815	250

Cam Base Plate, 3 Point Fixing — With Pre-mounted Euro Screws

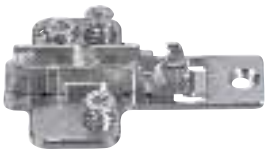

- Height adjustment via eccentric cam

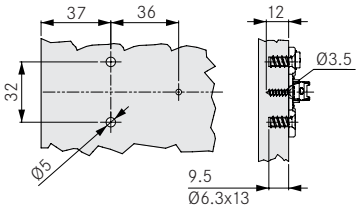

Height	Item No.	PU
00	318.493.70.0015	250
02	318.493.70.0215	250
04	318.493.70.0415	250
08	318.493.70.0815	250

Cam Base Plate, 2 Point Fixing — For Wood Screw

- Height adjustment via eccentric cam

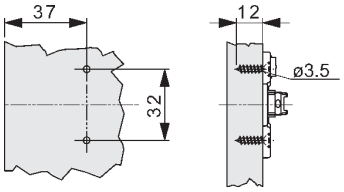

Height	Item No.	PU
00	314.493.71.0015	250
02	314.493.71.0215	250
04	314.493.71.0415	250
08	314.493.71.0815	250

Cam Base Plate, 2 Point Fixing — With Pre-mounted Euro Screws

- Height adjustment via eccentric cam

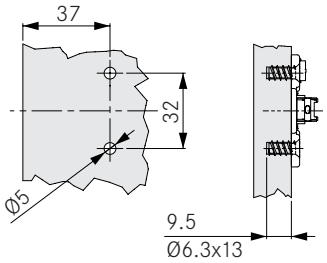

Height	Item No.	PU
00	318.493.71.0015	250
02	318.493.71.0215	250
04	318.493.71.0415	250
06	318.493.71.0615	250
08	318.493.71.0815	250

PU - Packaging unit

Dimensions in millimeters, fractional inch equivalents as noted.

Base Plates

Nexis

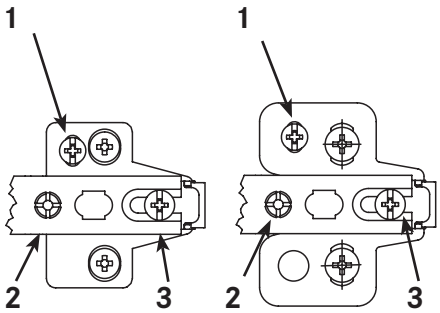

- Height adjustable
- Depth adjustment via hinge arm
- Side adjustment via hinge
- Use a #2 Pozi drive screwdriver for hinge adjustment
- Attach base plates using all available screw holes

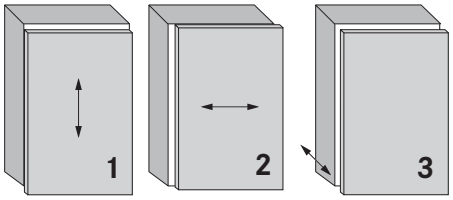

Height adjustment ± 2mm | Side Adjustment +1/-3mm | Depth adjustment +3/-1mm

All adjustment options can be made independently of one another

Cam Height Adjustable Base Plate, 2 Point Fixing — For Wood Screw

- Height adjustment via eccentric cam
- Steel, nickel-plated

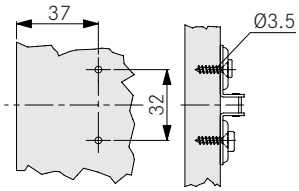

Height	Item No.	PU
00	314.393.69.0015	250
02	314.393.69.0215	250

Cam Height Adjustable Base Plate, 2 Point Fixing — For Euro Screws

- Height adjustment via eccentric cam
- Steel, nickel-plated

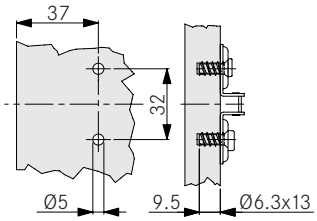

Height	Item No.	PU
00	318.393.69.0015	250
02	318.393.69.0215	250

2 Piece Height Adjustable Base Plate, 3 Point Fixing — For Wood Screw

- Height adjustment via screw
- Steel/die-cast, nickel-plated

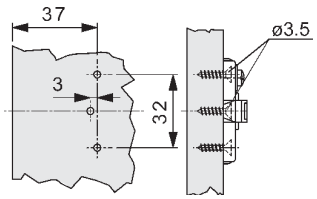

Height	Item No.	PU
00	315.393.55.0015	250
02	315.393.55.0215	250
04	315.393.55.0415	250
08	315.393.55.0815	250
18	315.393.55.1815	250

2 Piece Height Adjustable Base Plate, 3 Point Fixing — For Euro Screws

- Height adjustment via screw
- Steel/die-cast, nickel-plated

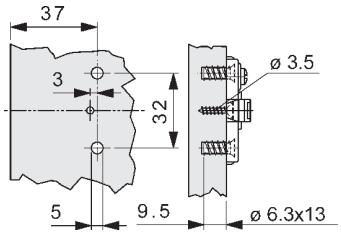

Height	Item No.	PU
00	317.393.56.0015	250
02	317.393.56.0215	250
08	317.393.56.0815	250
18	317.393.56.1815	250

Base Plates

Nexis

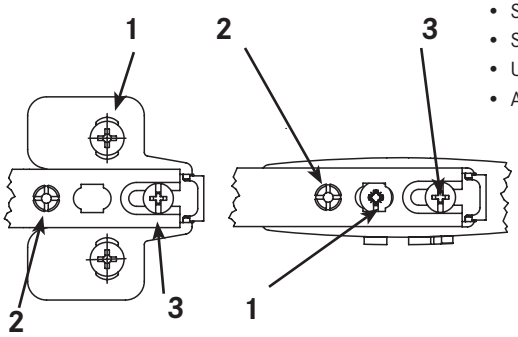

- Steel, nickel plated
- Side adjustment via elongated hole
- Use a #2 Pozi drive screwdriver for hinge adjustment
- Attach base plates using all available screw holes

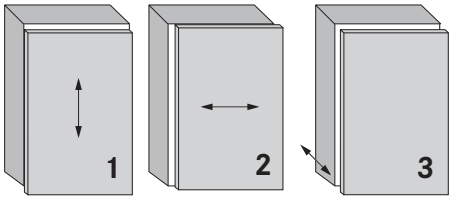

Height adjustment ± 2mm | Side Adjustment +1/-3mm | Depth adjustment +3/-1mm

All adjustment options can be made independently of one another

Wing Steel Base Plate, 2 Point Fixing — For Wood Screw

- Height adjustment via elongated screw holes

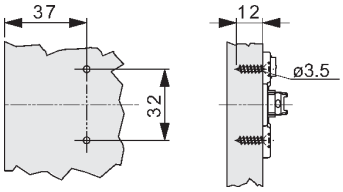

Height	Item No.	PU
00	314.393.81.0015	250
02	314.393.81.0215	250
04	314.393.81.0415	250

Wing Steel Base Plate, 2 Point Fixing — With Pre-mounted Euro Screws

- Height adjustment via elongated screw holes

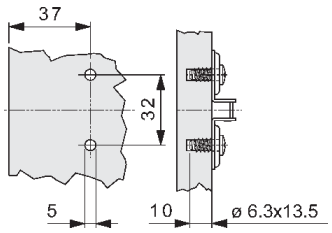

Height	Item No.	PU
00	318.393.81.0015	250
02	318.393.81.0215	250
04	318.393.81.0415	250

Wing Steel Base Plate, 2 Point Fixing — With Pre-mounted Euro Screws

- For common panel application
- Pre-mounted 10.5mm Euro screws
- Height adjustment via elongated screw holes

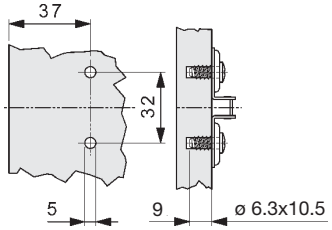

Height	Item No.	PU
00	346.393.92.1015	250

Linear Base Plate, 2 Point Fixing — For Wood Screws

- Height adjustment via cam
- Zinc-diecast

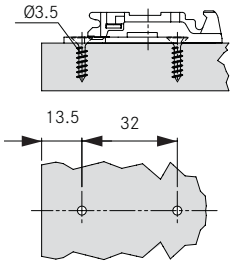

Height	Item No.	PU
00	301.390.91.0015	250

PU - Packaging unit

Dimensions in millimeters, fractional inch equivalents as noted.

Base Plates

Nexis

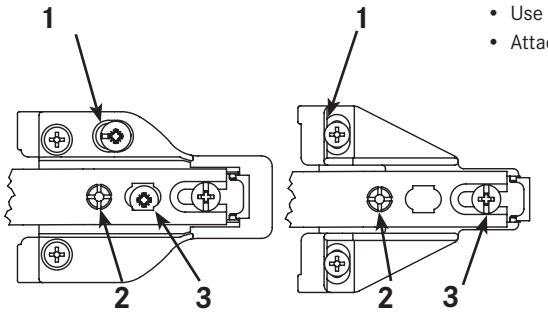

- Use a #2 Pozi drive screwdriver for hinge adjustment
- Attach base plates using all available screw holes

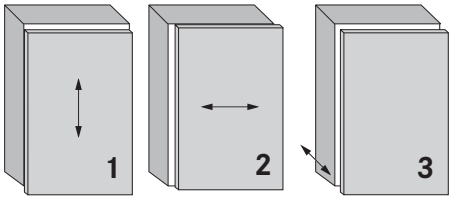

Height adjustment ± 2mm | Side Adjustment +1/-3mm | Depth adjustment +3/-1mm

All adjustment options can be made independently of one another

FFA Cam Base Plate — With Pre-mounted Wood Screws

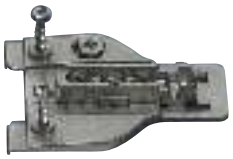

- Height and depth adjustment via eccentric cam

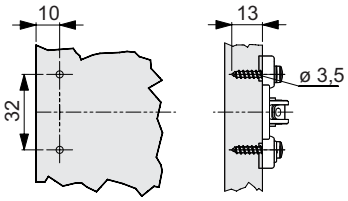

Height	Item No.	PU
00	346.290.92.0015	250
04	346.290.92.0415	250

FFA Cam Base Plate — For Wood Screw

- Height and depth adjustment via eccentric cam

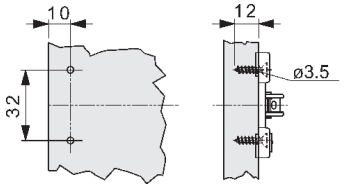

Height	Item No.	PU
00	346.290.91.0015	250
02	346.290.91.0215	250
04	346.290.91.0415	250

FFA Base Plate — For Wood Screw

- Height adjustment via elongated hole

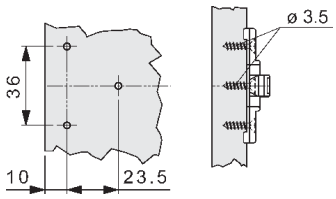

Height	Item No.	PU
00	346.290.88.0015	250
04	346.290.88.0415	250

Inset FFA Base Plate — For Wood Screw

- For Inset doors
- To be used with half overlay (cranking 08) hinges
- Height adjustment via screw

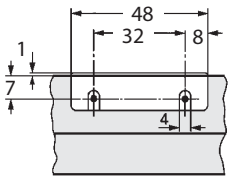

Height	Item No.	PU
02	346.290.90.0215	250

110° Standard Half Overlay hinge

Door Overlay	Drilling Distance (DD) 3	4			
22					
21	2.0*				
20	2.0				
19	2.0	1.0*			
18	2.0	1.0			
16	2.0	1.0			
	Minimum reveal (R)				

95° Thick Door Half Overlay Hinge

Door Overlay	Drilling Distance (DD) 3	4			
24					
22	2.0*				
20	2.0				
19	2.0	1.0*			
18	2.0	1.0			
16	2.0	1.0			
	Minimum reveal (R)				

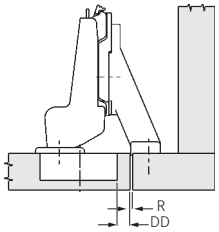

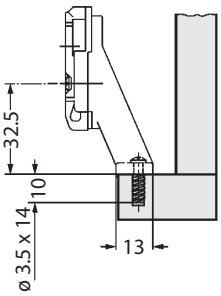

Hinge dimensions and reveal calculation based on factory setting.

*Minimum reveal for doors with beveled edges (R= 1mm) (factory setting).

NEXIS SOFT-CLOSE

Add a touch of luxury to your cabinet door

Soft-close, a unique controlled closing device, can be fitted on to the Nexis Impresso and Nexis hinges.

The Soft-close adds a cushion that controls and slows the door to a gentle, quiet stop.

Soft-close® for Nexis Impresso and Nexis. The unique shock absorber system for cabinet doors.

The elegant design and state of the art technology of the Nexis Soft-close make the perfect combination for the Nexis Impresso and Nexis hinge series.

Perfect for any application or situation where you want the doors to operate quietly on any type of flat panel door. Adding the Soft-close damper to your doors creates a cushion effect that controls and slows the door closing to a gentle stop. The number of Soft-close dampers per door depends on its size and weight. The Soft-close attaches easily without tools and can be added right from the start or as an addition later on.

UniSoft, Soft-close adapter

The UniSoft works for the Nexis Impresso and Nexis full overlay applications on flat panel doors and 5 panel doors. The UniSoft mounts independently from the hinge in the upper corner of your cabinet.

Its brushed nickel look blends well with the hinge finish. The UniSoft can be adjusted by the turn of a screw to the desired closing speed. The UniSoft can be installed at any time during the production process or by the end user after the cabinetry is installed.

Soft-close 170°

For Nexis Impresso 170° and Nexis 170° wide-angle hinges

- Soft-close adapter for 170° wide-angle hinges
- Slows door action, to close quietly
- Simply snap in place
- Completely tool-free
- Perfect retrofit solution

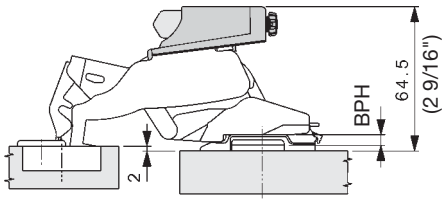

Soft-close 170°

Soft-close adapter for Nexis Impresso 170° and Nexis 170° wide-angle hinges with pre-mounted Soft-close damper

Item No.	PU
924.200.46.1115	125

Installation

Recommended Position for Soft-close Nexis

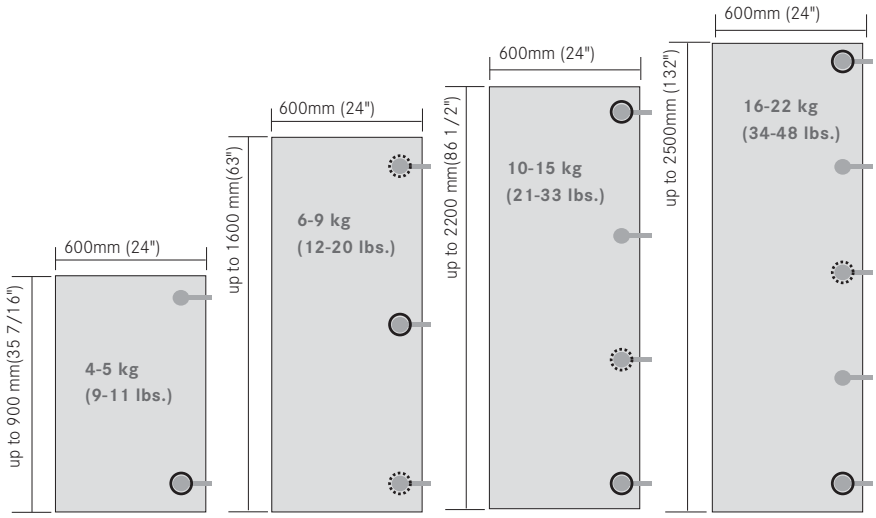

Recommended position for Soft-close

Position for additional Soft-close (where required)

IMPORTANT NOTE

The installation of our cabinetry hardware must comply with the Grass instructions that are stated in our available sales brochures; otherwise, Grass cannot be held liable. The company cannot accept any liability in the case of incorrect installation handling. If further information regarding installation and assembly is needed, please contact our factory directly.

Soft-close Nexis Impresso

For Nexis Impresso 95°, 100°, 110°, and 125° hinges

- Soft-close adapter for Nexis Impresso hinges
- Slows door action, to close quietly
- Quick and easy to attach
- Completely tool-free
- Damping force can be individually adjusted
- Best suited for flat panel doors

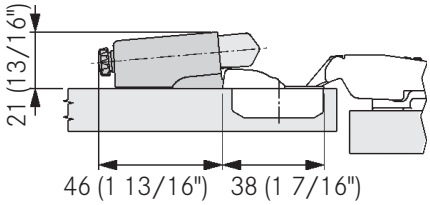

Soft-close Impresso

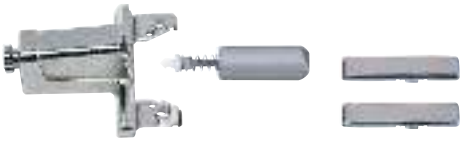

Description	Material	Item No.	PU
Soft-close Impresso Set		924.200.55.0115	125

1 set consists of:

1 Soft-close adapter for Nexis Impresso hinges

1 Soft-close damper

2 cover caps

Description	Material	Item No.	PU
Soft-close Impresso adapter		924.200.55.0015	125
Soft-close damper		924.012.50.0142	125
Cover cap for hinges - cranking 00	Steel, nickel-plated	514.300.21.0215	1000

Cover caps Soft-close compatible.

Installation Instructions for Soft-close Impresso

Soft-close® Impresso

Check for locater pins to verify Soft-close compatibility.

The installation of our cabinetry hardware must comply with the Grass instructions that are stated in our available sales brochures; otherwise, Grass cannot be held liable. The company cannot accept any liability in the case of incorrect handling. If further information regarding installation and assembly is needed, please contact our factory directly.
NOTE: For recommended position of Soft-close, please see page 41.

1. Take door off the cabinet, remove cover cap (if installed) on 00 cranking hinges , open flap of hinge cup.
2. Insert Soft-close Impresso adapter onto locater pins which are attached to the hinge cup.
3. Close Impresso flap of hinge cup completely. 4 Insert Soft-close damper completely into Soft-close adapter with the flattened side pointing down.
4. Mount cabinet door to base plates Mount cover cap on hinge if desired (cover cap is included in set).
5. Adjust Soft-close Impresso if necessary via adjustment screw.
6. For flat panel doors.

PU - Packaging unit

Dimensions in millimeters, fractional inch equivalents as noted.

Soft-close Nexis

For Nexis 95°, 100°, 110°, and 125° hinges

- Soft-close adapter for Nexis hinges
- Slows door action, to close quietly
- Quick and easy to attach
- Completely tool-free
- Damping force can be individually adjusted
- Perfect retrofit solution

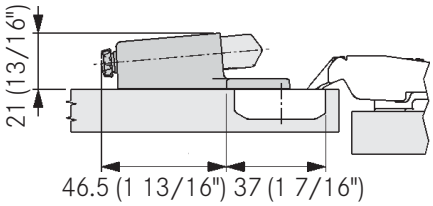

Soft-close Nexis

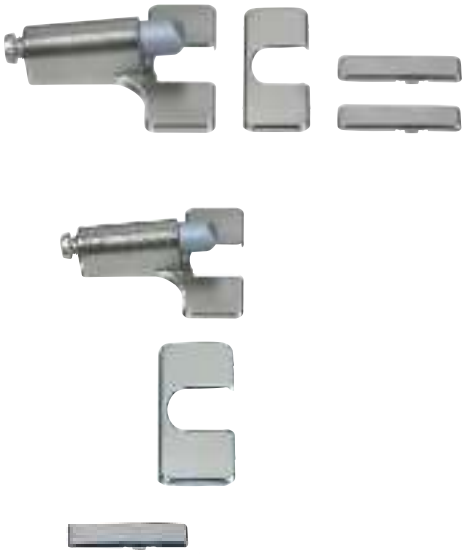

Description	Material	Item No.	PU
Soft-close Nexis Set		924.200.40.0115	125

1 set consists of:

1 Soft-close adapter with pre-mounted Soft close damper for Nexis hinges

1 cover cap for hinge cup

2 cover caps for hinge arm

Description	Material	Item No.	PU
Soft-close adapter		924.200.40.0215	125
Cover cap for hinge cup		514.300.20.0115	125
Cover cap for hinges - cranking 00	Steel, nickel-plated, without imprint	514.300.21.0215	1000

Cover caps Soft-close compatible.

Installation Instructions for Soft-close

Soft-close® Nexis

Check for notches to verify Soft-close compatibility.

The installation of our cabinetry hardware must comply with the Grass instructions that are stated in our available sales brochures; otherwise, Grass cannot be held liable. The company cannot accept any liability in the case of incorrect handling. If further information regarding installation and assembly is needed, please contact our factory directly.
NOTE: For recommended position of Soft-close, please see page 41.

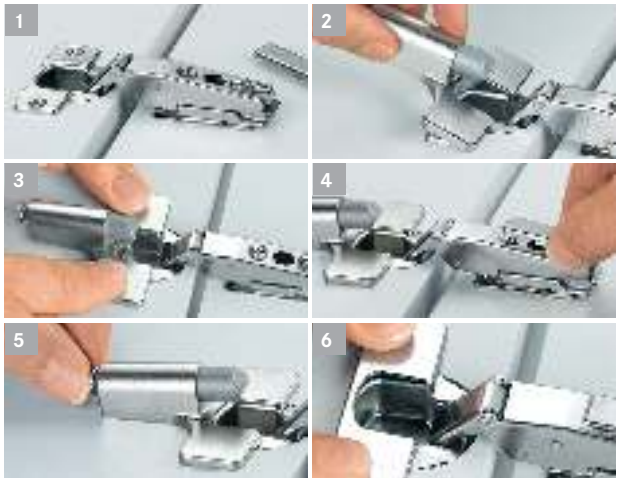

1. Remove cover cap (if installed) on 00 cranking hinges.
2. Insert Soft-close Nexis adapter into notches located on the sides of the hinge cup and attach adapter.
3. Press both sides of the adapter downward until you hear a noticeable “click”.
4. Mount cover cap on hinge if desired (cover cap is included in set).
5. Adjust Soft-close Nexis if necessary via adjustment screw.
6. Use cover for hinge cup (included in set) for the hinge without Soft-close Nexis to achieve a uniform appearance.

UniSoft

Soft-close for doors

- Works for face frame cabinets on all door overlays
- Works for frameless cabinets on full overlay doors
- Brushed nickel look blends in well with hinge finish
- Non-handed with a low profile design
- Manually adjustable to desired closing speed
- Mounts independently from the hinge in the upper corner of the cabinet
- Instantly allows the cabinet door to close quietly and smoothly
- Scratch protector and front bumper with cushion for a quiet close

Unisoft Adapter

Description	Material	Item No.	PU
Unisoft, Polybag	Plastic, chrome	18971-37	1
Unisoft, Polybag Bulk	Plastic, chrome	18971-40	25
Unisoft, Bulk	Plastic, chrome	18971-14	250

Includes #6 x 3/4 Pan head screw

Installation

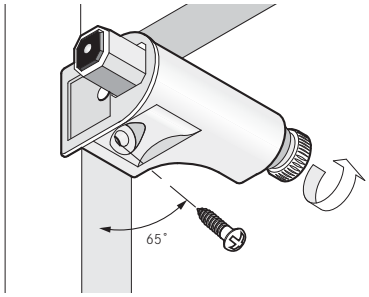

Use a 65° angle for best base results. Pilot drill 2.3mm (Ø3/32") and 1/4" deep for a #6 x 3/4" Pan head screw recommended. Mount in upper corner on hinge side.

Mounting Position

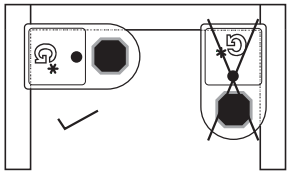

IMPORTANT The installation of our cabinetry hardware must comply with the Grass instructions that are stated on this catalog page.

Adjustment

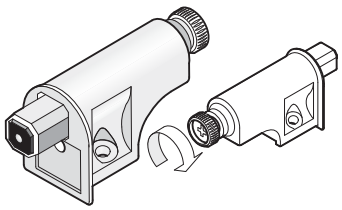

Turn adjustment screw to move damper in and out. Adjust in for heavier doors or out for light doors. Use Phillips or Pozidrive screwdriver or adjust manually.

Dimensions

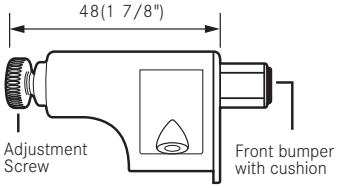

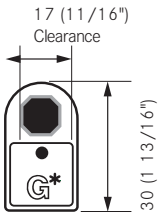

UniSoft per Door

Use one UniSoft for most applications. For heavier doors use two or more. Trial mount recommended.

PU - Packaging unit

Dimensions in millimeters, fractional inch equivalents as noted.

TIPMATIC PLUS

A gentle push and the doors seemingly open automatically

This exclusive solution for handle-free cabinet doors will turn any cabinetry into something special.

Tipmatic for the Nexis hinge series adds a new element for handle free doors. A gentle tap on the door is enough pressure to open the cabinet door to a convenient angle, making it comfortable and easy to grip the handle free door panel and open it further.

When closing the door, another gentle push activates the magnets and keeps the doors closed. The Tipmatic Plus is the perfect solution when designing cabinetry without handles for a clean, modern design. The Tipmatic Plus is compatible with all Nexis free-swinging hinges and can be used with wood doors and glass doors.

The Tipmatic Plus consists of a Tipmatic adapter, Tipmatic ejector, magnetic pin, and counter plate. The Tipmatic can be installed on the hinge without the use of any tools. The magnetic pin is installed on the interior of the cabinet while the counter plate is glued or screwed onto the cabinet door.

Tipmatic Plus

For Nexis free swing hinges

- Gently tapping the front causes the doors to open to a convenient angle
- Compatible with all free-swing hinges in the Nexis series
- Perfect retrofit solution

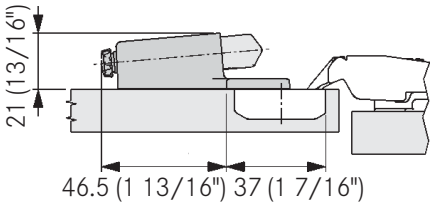

Tipmatic Plus Set

1 set consists of:

1 Tipmatic Plus adapter
1 Tipmatic Plus ejector
1 counterplate for gluing
1 counterplate for screw fixing incl. screw
1 magnetic pin

Item No.	PU
924.275.40.0315	25

Face Frame or Standard Adapter Plate — For Wood Screws

- Quick upgrade installation
- Attach with wood screws (3.5 x 13)
- Plastic RAL 7035, light grey

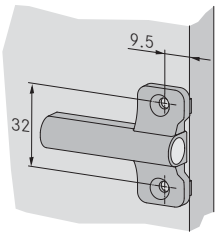

Item No.	PU
63311-40	25

Linear Adapter Plate — For Wood Screws

- Design solution – also suitable for inset door applications
- Attach with wood screws (3.5 x 13)
- Plastic RAL 7035, light grey

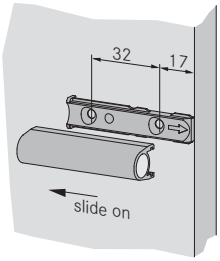

Item No.	PU
63309-40	25

PU - Packaging unit

Dimensions in millimeters, fractional inch equivalents as noted.

Installation Instructions for Tipmatic Plus

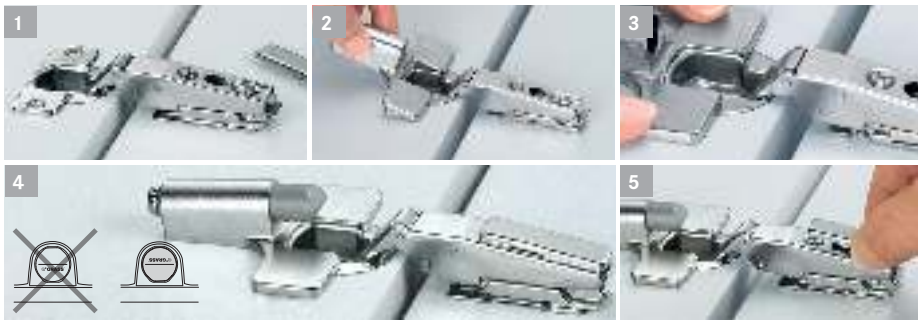

Tipmatic Plus – quick and easy fitting

1. Remove hinge arm cover cap (where applicable).
2. Insert Tipmatic Plus with the two small hooks underneath into the recesses in the hinge cup, at a slight angle.
3. Push down both sides of the adapter simultaneously until it engages with an audible 'click'.
4. With the flatter side facing downwards, push the Tipmatic ejector fully into the adapter opening.
5. Adjust front gap, put on hinge arm cover cap (where applicable).

Installation of Tipmatic Plus Adapter Plate

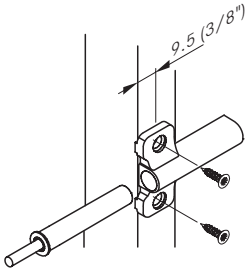

Frame adapter Plate

Do not use door bumpers.

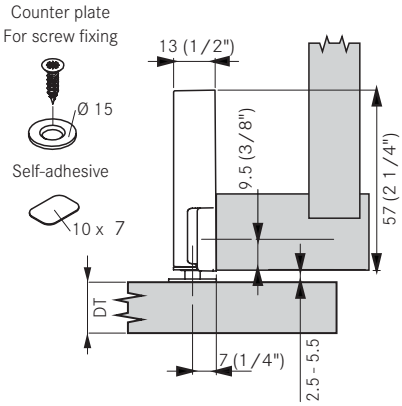

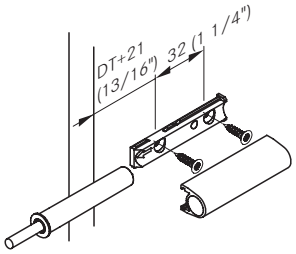

Linear adapter Plate

Do not use door bumpers.

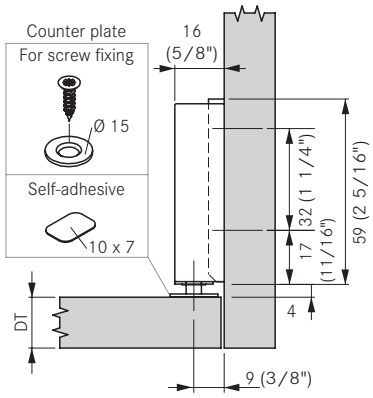

Recommended Position for Tipmatic Plus

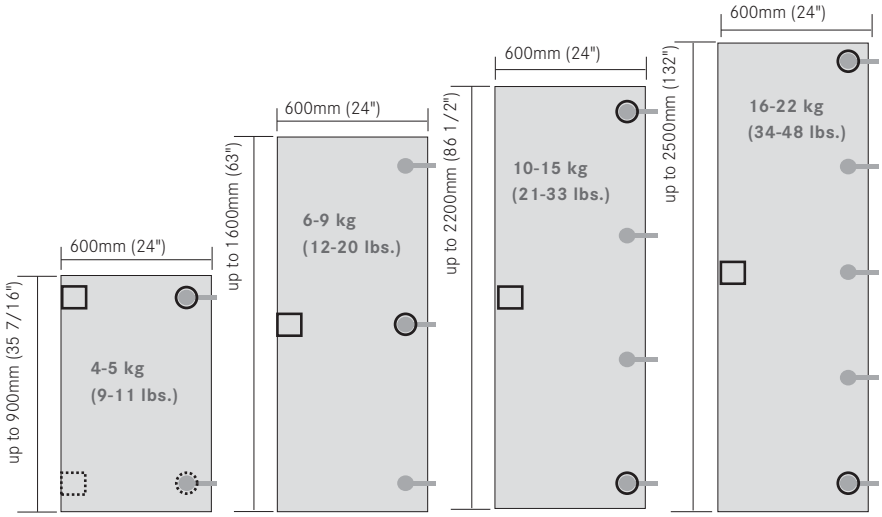

- Recommended position for Tipmatic Plus .
- Counterplate position (on the same level as the magnetic pin). One magnetic pin per door.
- Recommended position for Tipmatic Plus for wall cabinet applications.
- Counterplate position for wall cabinet applications (on the same level as the magnetic pin). One magnetic pin per door.

IMPORTANT

Tipmatic Plus is only suitable for Nexis free-swing hinges. Ensure that the surface is clean and fully degreased before gluing the adhesive plate.

If Tipmatic Plus is used in conjunction with a different hold-closed system, Grass does not provide any guarantees.

The installation of our cabinetry hardware must comply with the Grass instructions that are stated in our available sales brochures; otherwise, Grass cannot be held liable. The company cannot accept any liability in the case of incorrect installation or handling. If further information regarding installation and assembly is needed, please contact our factory directly.

Tipmatic

For handle-free wooden doors

- Gently tapping the front causes the doors to open to a convenient angle
- Use with Tiomos Tipmatic Plus or with Nexis and Tiomos free-swinging hinges
- Large magnet catch range – holds door closed securely
- Gap adjustment from 2.5 to 5.5mm with integrated, self-locking and tool-free depth adjustment feature
- Mount on the front side of the cabinet or with an adapter plate

Tipmatic Pin — For Drilling

- Incl. Tipmatic mechanism:
  - Stick on strike plate
  - Screw on strike plate
- Hole drilled from the front
- Plastic RAL 7036, platinum grey

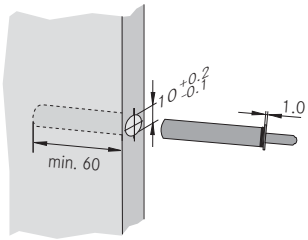

Item No.	PU
68873-06	25

Adapter Plate for Line Boring — For Euro Screws

- Suitable for line boring 28 and 37mm
- Attach with Euro screws (6.3 x 13.5)
- Plastic RAL 7035, light grey

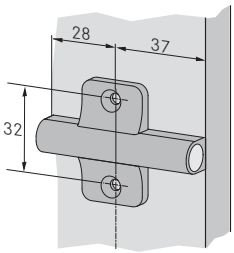

Item No.	PU
63310-40	25

Face Frame or Standard Adapter Plate — For Wood Screws

- Quick upgrade installation
- Attach with wood screws (3.5 x 13)
- Plastic RAL 7035, light grey

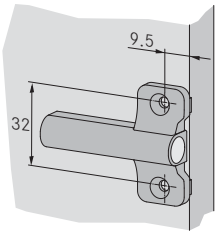

Item No.	PU
63311-40	25

Linear Adapter Plate — For Wood Screws

- Design solution – also suitable for inset door applications
- Attach with wood screws (3.5 x 13)
- Plastic RAL 7035, light grey

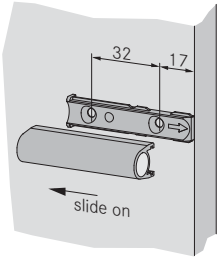

Item No.	PU
63309-40	25

PU - Packaging unit

Dimensions in millimeters, fractional inch equivalents as noted.

Mounting Dimensions

Tipmatic Pin

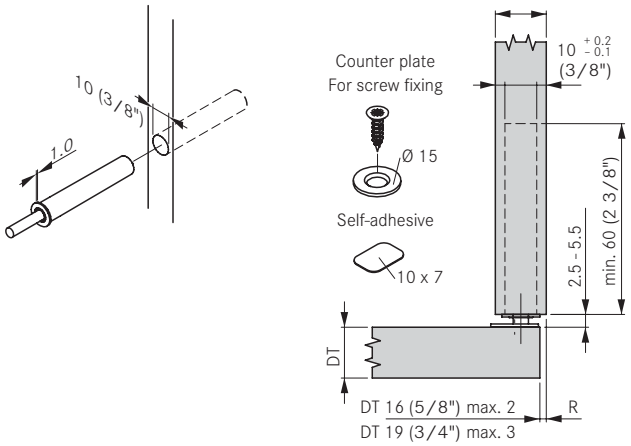

Adapter Plate for Line Boring

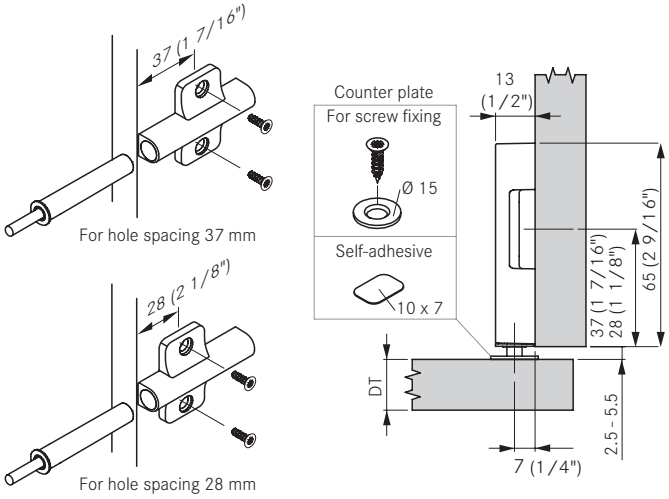

Linear Adapter Plate, Overlay

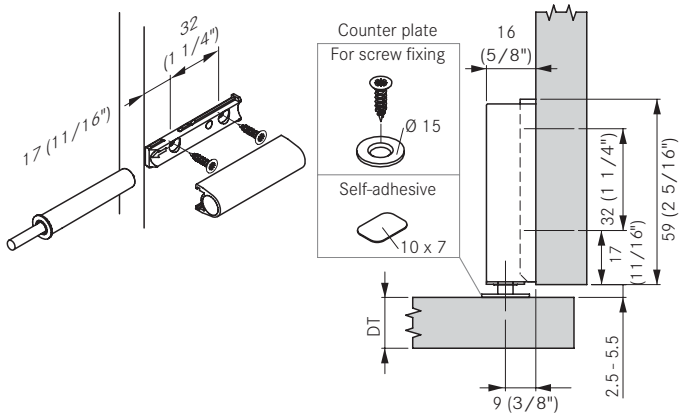

Linear Adapter Plate, Inset

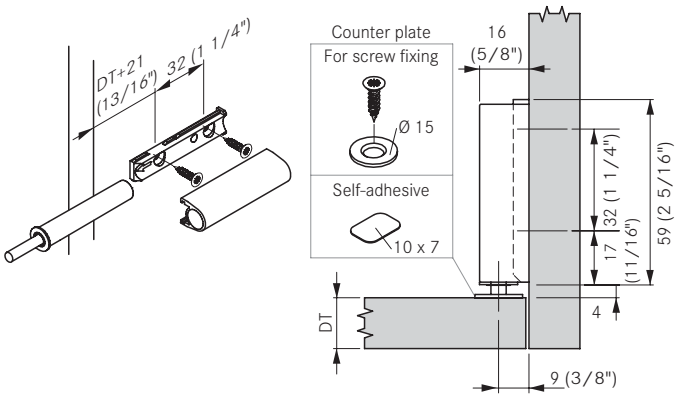

Face Frame Plate

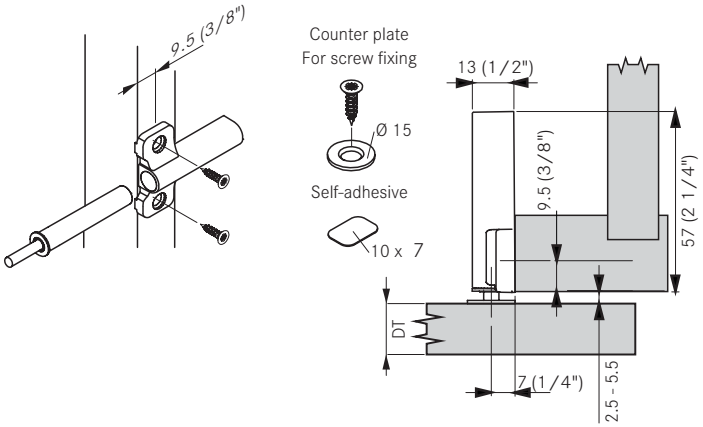

Legend

BPH = Base Plate Height
CC = Center Cup
DD = Drilling Distance
DP = Door Protrusion
DT = Door Thickness
G= Gap
OL = Overlay
R = Reveal

INSTITUTIONAL HINGES

Designed for high use environments
Grass Institutional Hinges offer the perfect solution for institutional casework in schools, hospitals, commercial, and furniture environments where the cabinetry has a considerable amount of use. Distinguished by its outstanding durability based on all metal construction, this institutional hinge system is designed for frameless cabinetry and offers high load weight bearing capabilities.

Form. Fit. Function. Engineered to exceed your expectations. Its sturdy design makes it your first choice in institutional cabinetry hardware.

Institutional Hinge

Technical Information

Hinge Insertion

A slight press with the thumb securely connects the door with the cabinet.

Hinge Removal

Use flathead screwdriver to remove hinge arm from hinge cup with a simple twist.

Adjustments

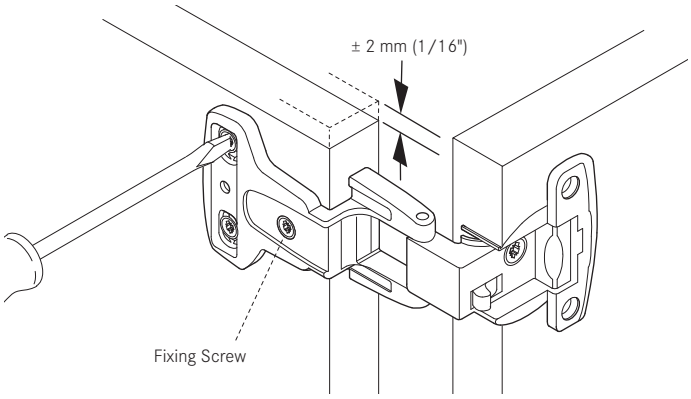

Height Adjustment

1. Loosen fixing screw.
2. Adjust door ± 2mm up and down.
3. Tighten fixing screw.

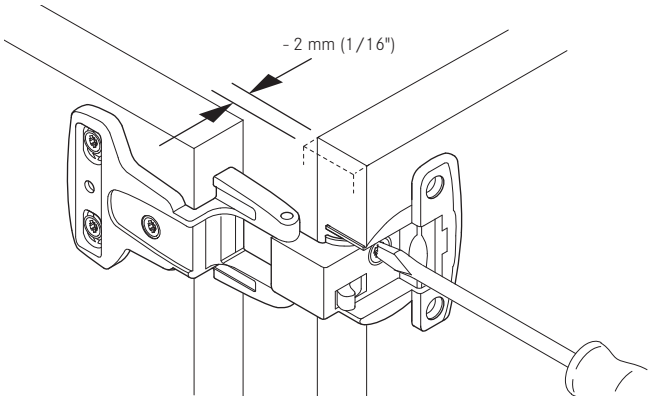

Side Adjustment

1. Adjust door 2mm out via Cam adjustment

Number of Hinges per Door

The number of hinges required depends on the size and weight of the door. The distance between the hinges should be spaced as wide as possible.

Use the diagram to determine the number of hinges needed. These recommendations are for doors without accessory attachments.

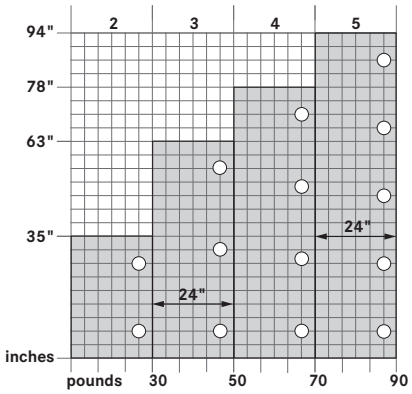

Institutional Hinges

MB series barrel hinge

- Hinges made of zinc die-cast construction for extreme durability
- Recommended for side panel thicknesses of 19mm (3⁄4")
- Tool-free snap-on mounting - quick and easy installation
- All types of hinge mounting (corner and center wall)
- Side-to-side adjustment of - 2mm (1⁄16")
- Height adjustment of +/- 2mm (1⁄16")
- Cover cap conceals mounting screws
- Available in black and nickel plated
- Designed for frameless cabinet construction
- Opening angles range from 180° to 270°
- *Meets ANSI/BHMA A156.9 - Grade I requirements

How to specify institutional hinge hardware:

1. Choose screw-on or dowelled cup: one cup fits all hinge arms.
2. Choose hinge arm based on application (cover cap included).
3. Special #6.3 x 13.5mm Euro screws (2) required for hinge arm mounting. Must be ordered separately.

MB 8010 Hinge Cup

Hinge Cup	Pattern	Material	Screw-On Item No.	Dowelled Item No.	PU
MB 8010 Hinge Cup - 45mm pattern	45	Nickel Plated	**F150**0000**006**233	**F150**0000**021**233	200
	45	Black	**F150**145**123**233	**F150**145**124**233	200

Hinge Arms

Description	Material	Item No.	PU
MB 8310 Hinge Arm - Full Overlay -15mm (19/32")	Nickel Plated	**F150**0000**014**223	100
	Black	**F150**145**125**223	100

Description	Material	Item No.	PU
MB 8510 Hinge Arm - Half Overlay - 5.5mm (7/32")	Nickel Plated	**F150**0000**015**223	100
	Black	**F150**145**399**223	100

Description	Material	Item No.	PU
MB 6110 Hinge Arm - Inset	Nickel Plated	**F150**0000**007**223	100

Common Panel Hinge Arm

Description	Material	Item No.	PU
MB 8610 Common Panel Hinge Arm - 5.5mm (7/32")	Nickel Plated	**F150**0000**016**223	100
	Black	**F150**145**394**223	100

Euro Screws for Hinge Arm Mounting	Item No.	PU
6.3 x 13.5mm Nickel Plated	B405.000.51.25	100

Cover Cap

Cover cap included with hinge arm

*Meets Grade I requirements when third screw and adjustment tabs are in place.

PU - Packaging unit

Dimensions in millimeters, fractional inch equivalents as noted.

Full Overlay 270°

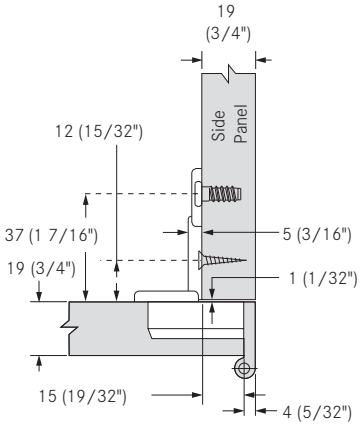

270°

Half Overlay 230°

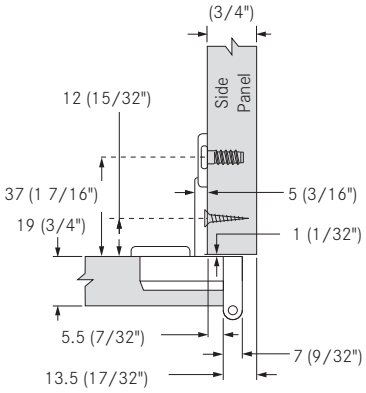

230°

Common Panel 180°

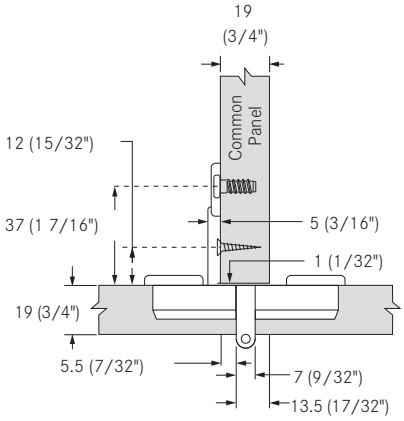

180°

Inset 180°

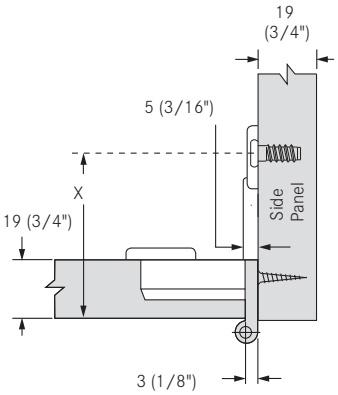

180°

Hinge Arm Dimensions

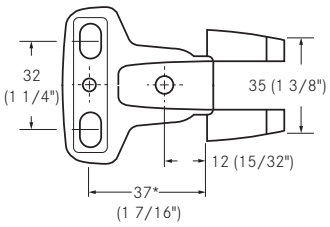

Institutional hinges
32mm compatible

*For Inset doors use:
39mm (1 17/32") + Door Thickness

Specifications

Application	Reveal	Opening Angle	Overlay
	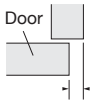	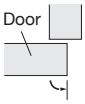	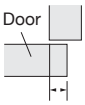
Full Overlay	4mm (5/32")	270°	15mm (19/32")
Half Overlay	13.5mm (17/32")	230°	5.5mm (7/32")
Common Panel	7mm (9/32")	180°	5.5mm (7/32")
Inset	3mm (1/8")	180°	-

Cup Depth

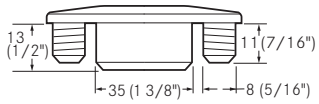

Hinge Cup

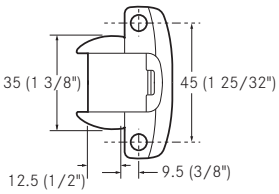

Cup Drilling

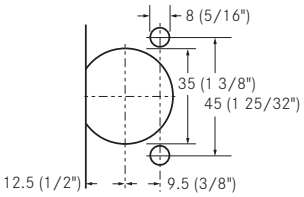

IMPORTANT
To determine the correct application Grass strongly recommends a trial mounting for all hinges and base plates.

Nexis Slide-on 73

270° single-joint Institutional hinge

- 3-dimensional adjustment with suitable base plate
- For door thicknesses 15 to 21mm
- For door overlay up to 16mm (5/8")
- Automatic hold-closed function
- Meets ANSI/BHMA A156.9 - Grade II requirements

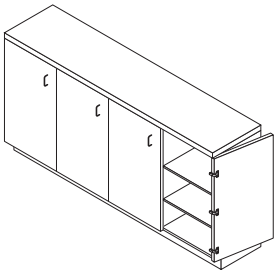

Nexis 73	Opening Angle 270°			Screw-On	Dowelled
Full Overlay	**Cranking 00**	**Pattern**	**Type**	**Item No.**	**Item No.**	**PU**
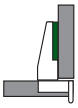	Hinge cup: diecast, nickel-plated; Hinge arm: diecast, nickel-plated	48	Hold-close	412.770.08.0015	412.770.09.0015	125

Base Plates, 2 and 3-Point Fixing

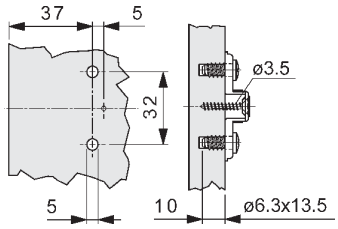

Height	Description	Item No.	PU
00	Zinc die-cast, nickel plated for Euro Screw	317.293.66.0015	250

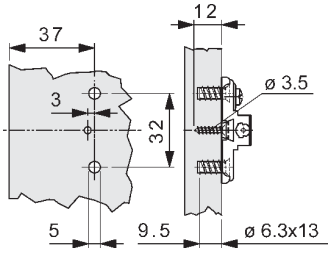

Height	Description	Item No.	PU
00	Steel, nickel plated with pre-attached Euro Screws	318.393.52.0015	250

Cover Caps	Cranking 08 and 15	Item No.	PU
	Black plastic	514.000.22.9662	1000

Wood Screw, Nickel-plated	Item No.	PU
#6 x 5/8" FHP, NI	81001-43	500

PU - Packaging unit

Dimensions in millimeters, fractional inch equivalents as noted.

Full Overlay

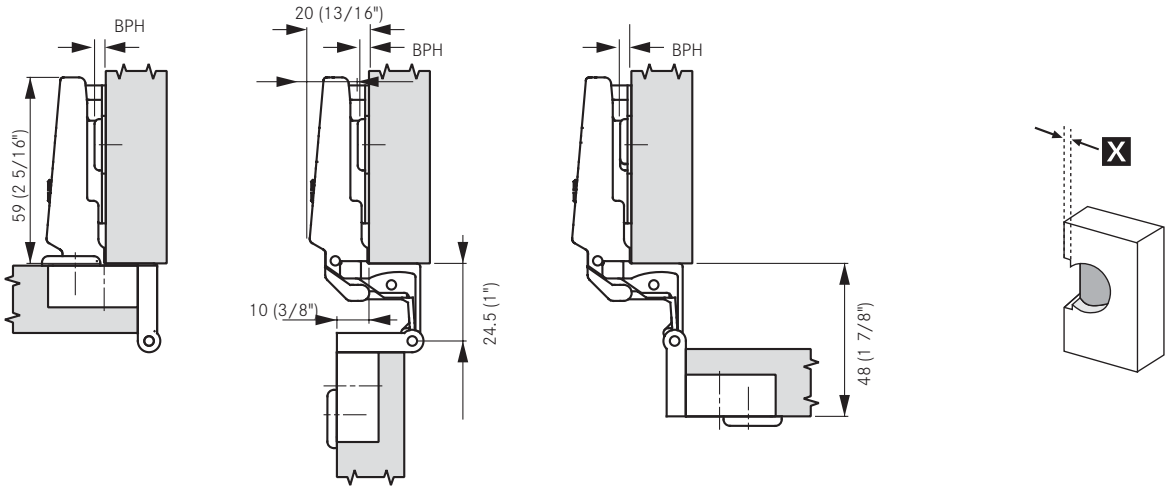

Drawings show hinge with a base plate, **(BPH) 00**.

Door Overlay

Door Overlay max.	Depth of cut-out (x) 6	5	4	3	2	1	0
16	0						
15		0					
14	2		0				
13		2		0			
12	4		2		0		
11		4		2		0	
10			4		2		0
9				4		2	
8					4		2
7						4	
6							4
	Base Plate Height (BPH)						

Note: Hinge dimensions and gap calculation based on factory setting.

IMPORTANT

To determine the correct application Grass strongly recommends a trial mounting for all hinges and base plates.

Drilling Patterns

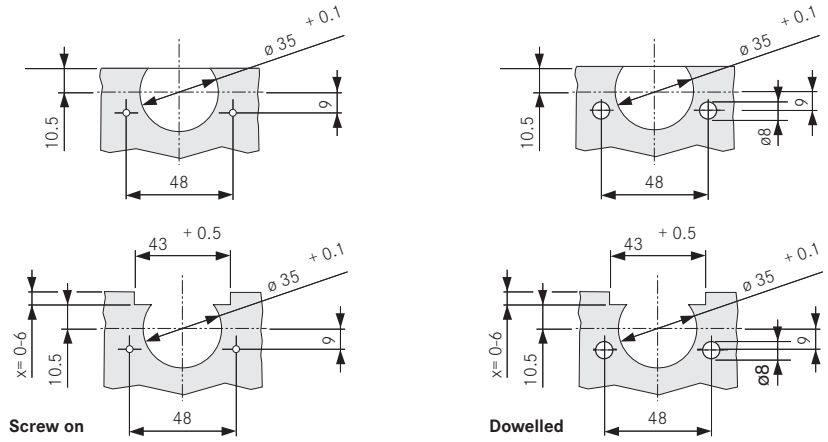

Cup Dimensions

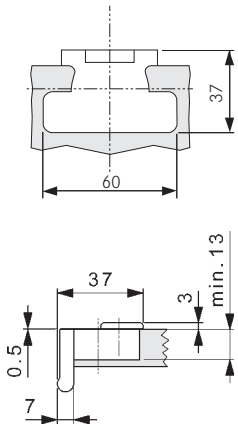

SPECIALTY HINGE ITEMS

Grass offers a wide variety of specialty hinge items to meet every application imaginable.

Whether you need a Pie Cut Corner hinge for a lazy susan application, a no-bore glass door hinge for a china cabinet or a steel door hinge for a medicine cabinet, Grass can provide a unique solution for your specific hardware application.

Balancing convenience, function and reliability to make installation easier while reducing your labor cost is our goal. Grass also offers machinery for hinge door drilling and insertion. Choose from a selection of machinery that will fit your needs.

Tri-view-mirror hinge

90° hinge for wooden or steel doors

- For medicine cabinets with wooden or steel doors
- Concealed self-locking hinge, top and bottom mount, for mirror cabinets and variable angle cabinets without partition
- Universal left and right handed

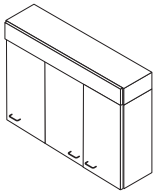

Tri-view-Mirror Opening Angle 90°

Description	Material	Item No.	PU
Hinge for wood doors	Hinge cup: white plastic Hinge arm: diecast, nickel-plated	212.100.34.9570	250

Description	Material	Item No.	PU
Hinge for metal doors	Hinge cup: white plastic Hinge arm: diecast, nickel-plated	212.100.36.9570	250

Note: Base plate must be ordered separately.

Suitable Base Plate

Material	Item No.	PU
diecast, nickel-plated	511.200.04.9515	250

Center Plate (optional)

Material	Item No.	PU
nylon	514.000.51.0061	250

Nylon center plate allows adjustment and correct positioning of screws.

Mounting Measurements for Wood Doors

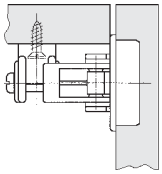

Height adjustment +/- 2mm

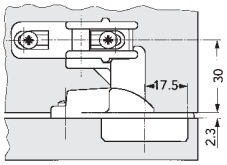

Side adjustment +/- 2mm

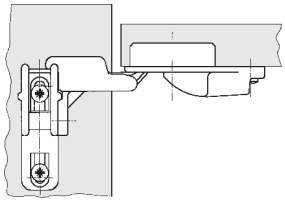

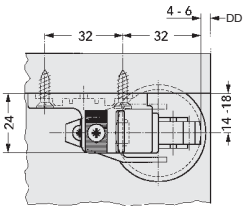

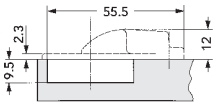

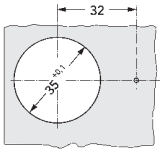

Mounting Measurements for Metal Doors

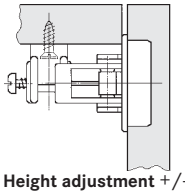

Height adjustment +/- 2mm

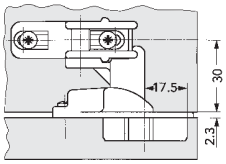

Side adjustment +/- 2mm

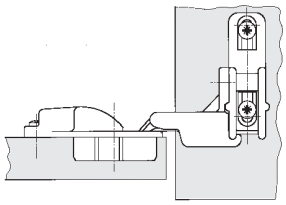

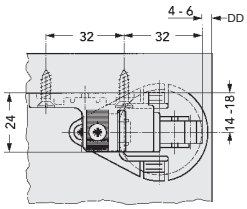

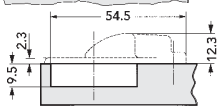

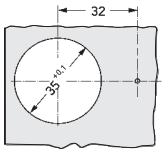

IMPORTANT

To determine the correct application Grass strongly recommends a trial mounting for all hinges and base plates.

975 VZ PCC

Pie Cut Corner Hinge

- Small or large gap between door
- Shallow profile does not interfere with lazy susans
- Same drilling on both doors
- Height adjustable
- Accommodates doors 15 to 24mm thick.

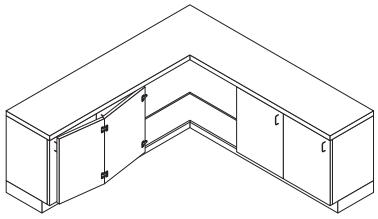

975 VZ Pie Cut Corner Hinge

Description	Material	Item No.	PU
975 VZ Pie Cut Corner Hinge kit	Hinge: Zinc, nickel-plated	13128-37	1
975 VZ Pie Cut Corner Hinge	Hinge: Zinc, nickel-plated	13127-09	100

1 kit consists of:

2 PCC hinges (13127-01)
1 magnetic catch
1 strike plate
1 instruction sheet

Door Sizing Example

Door Sizing Example	
Overall cabinet opening	305mm
-Reveal	3mm
	=302mm
-2mm gap for bumper pad	2mm
	=300mm
- Door Thickness	19mm
	=281mm
-1mm Gap between doors	1mm
Door Size	**= 280mm**

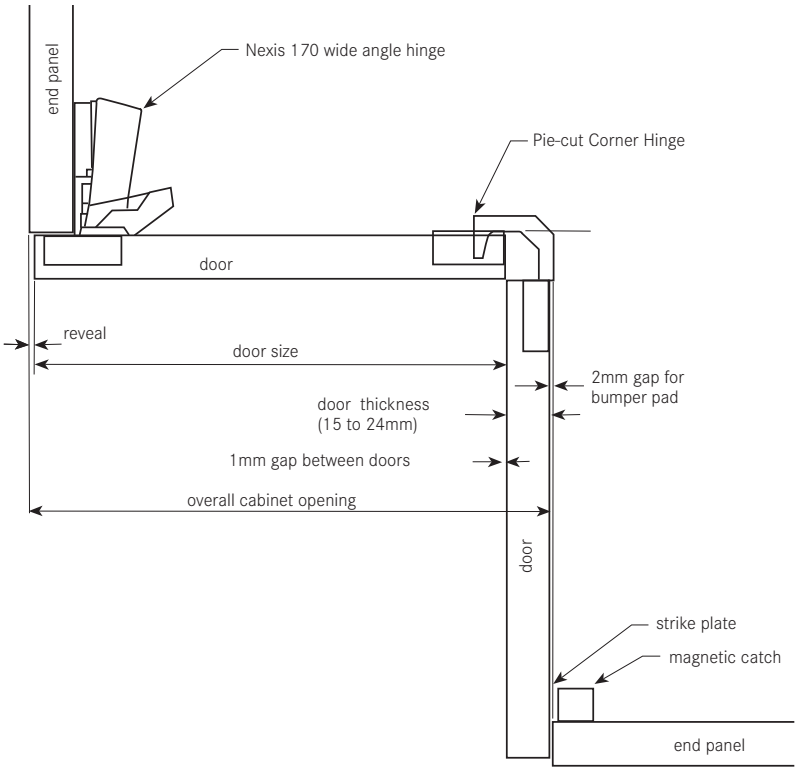

Note:

Use a POZIdrive screwdriver for hinge adjustment.
Fastening screws for hinge: #6 x 5/8" FHP (not included)
Fastening screws for catch: #4 x 5/8" FHP (not included)

IMPORTANT

To determine the correct application Grass strongly recommends a trial mounting for all hinges and base plates.

PU - Packaging unit

Dimensions in millimeters, fractional inch equivalents as noted.

5/8" Door Thickness Application

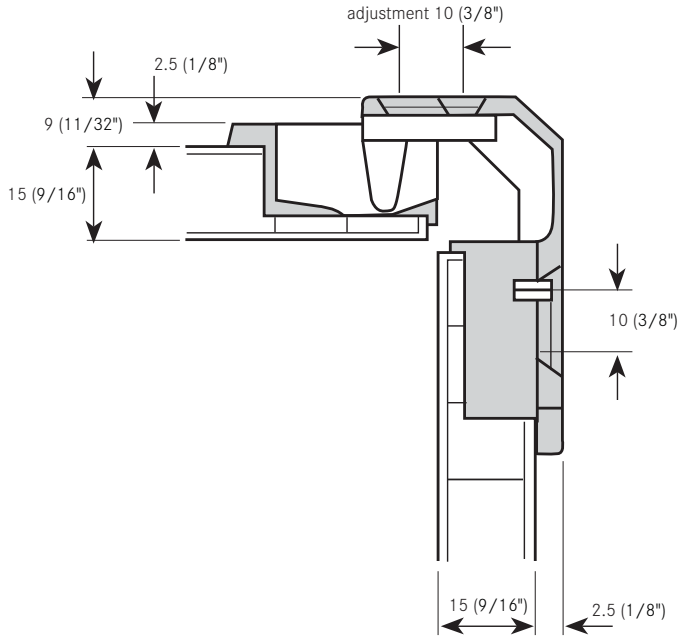

1" Door Thickness Application

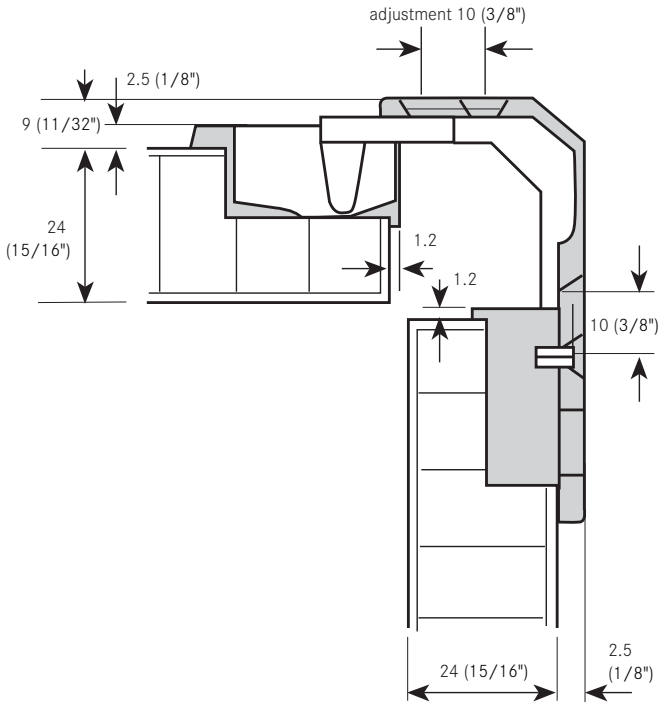

Adjustment

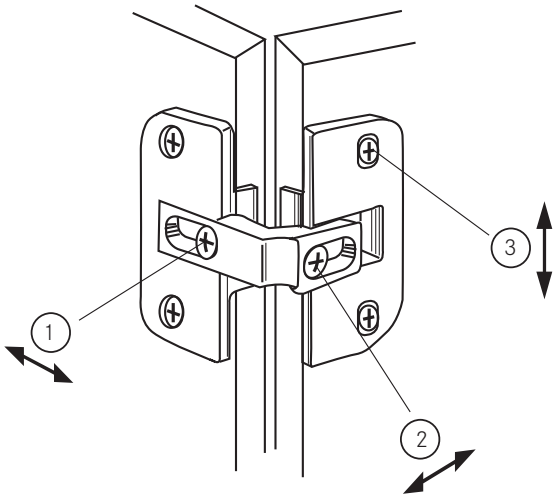

1. Side Adjustment up to 10mm
2. Depth Adjustment up to 10mm
3. Height Adjustment ± 1mm

Cup Dimensions

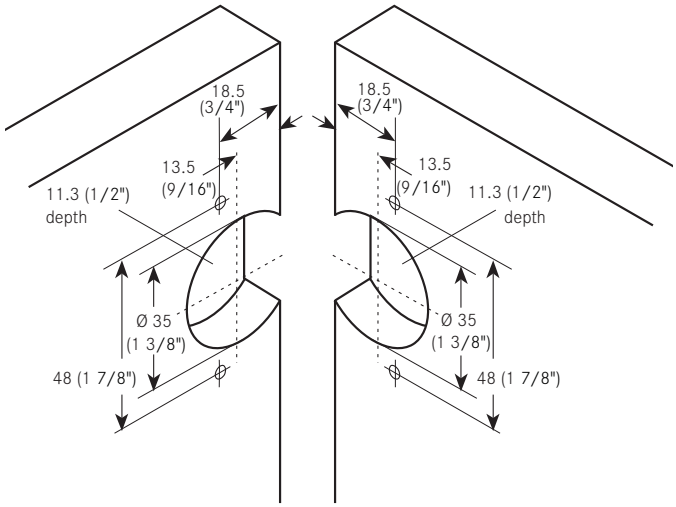

Flap hinge

90° flap with 35mm cup

- For flap thicknesses up to 20mm
- Cup edge cover
- Bottom and flap door are flush inside the cabinet when doors are open
- Hinge is supplied unassembled
- Identical drilling pattern for base and flap door
- 3-dimensional adjustment
- Sturdy design

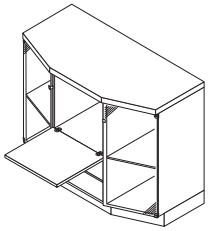

Flap Hinge Opening Angle 90°

Full Overlay		Item No.	PU
	Hinge cup: diecast, nickel-plated; Hinge arm: diecast, nickel-plated	210.735.04.0015	100

Mounting Measurements for Flap Hinge

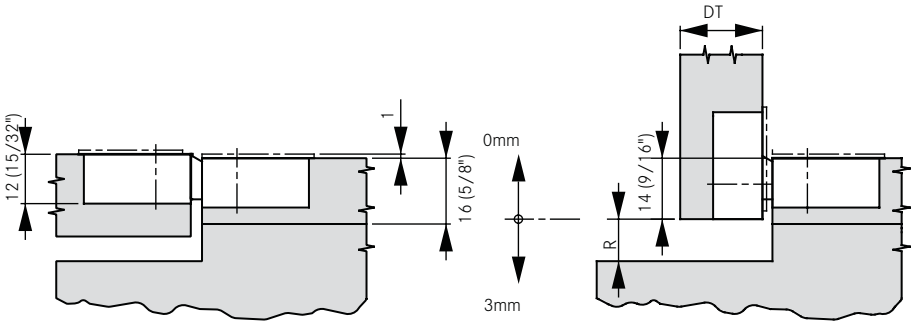

Hinges per Door

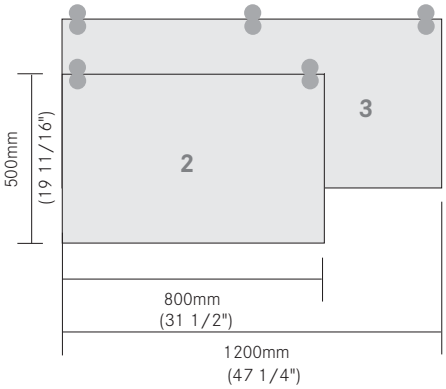

Fixing of flap and base parts using chip board screws Ø 3 x 13 m (screws not included).

Hinge dimensions and calculation of gap based on factory setting.

Flap thickness (DT)	14	15	16	17	18	19	20
Gap min. (R)	0.2	1.0	2.0	3.0	3.8	5.0	6.0

IMPORTANT

To determine the correct application Grass strongly recommends a trial mounting for all hinges and base plates.

Cup Dimensions

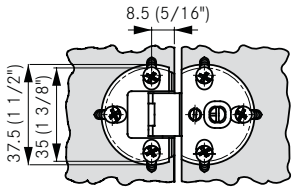

Adjustment

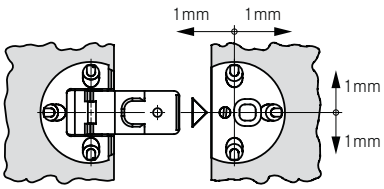

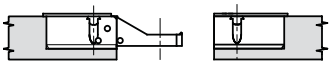

PU - Packaging unit

Dimensions in millimeters, fractional inch equivalents as noted.

Glass door hinge

180° No-bore glass door hinge

- Opening angle 180°
- Direct mounting on cabinet sidewall
- Inset application
- Includes self-adhesive pads
- Thickness of glass: 4-6mm

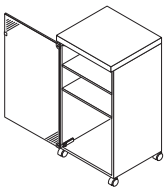

No-bore Hinge

Description	Location	Material	Item No.	PU
LA/RB- Left side (above) Right side (below)		Hinge cup: diecast; Hinge arm: nickel-plated	298.705.92.5015	250

Description	Location	Material	Item No.	PU
RA/LB- Right side (above) Left side (below)		Hinge cup: diecast; Hinge arm: nickel-plated	298.705.92.5115	250

Note: product lead time approximately 12 weeks.

Pull

Description	Material	Item No.	PU
Pull	Diecast, nickel-plated fixing with double-sided adhesive pad	371.290.00.0015	250

Note: product lead time approximately 12 weeks.

Hinge Dimensions

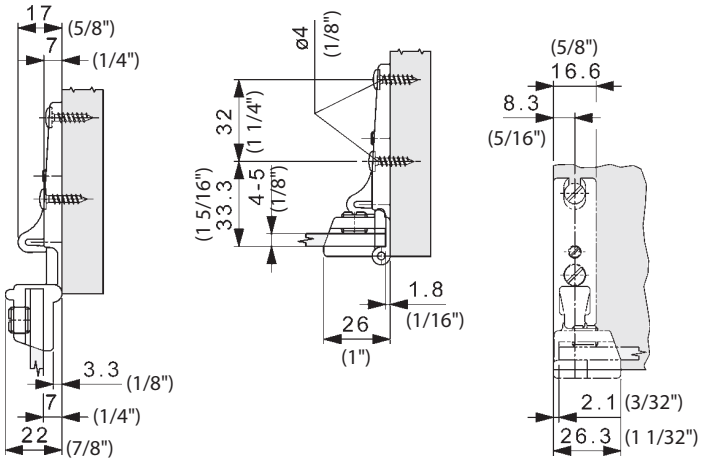

IMPORTANT To determine the correct application Grass strongly recommends a trial mounting for all hinges and base plates.

Installation

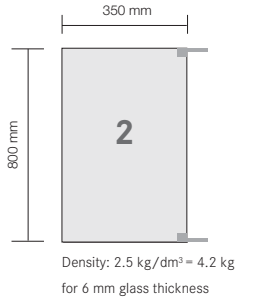

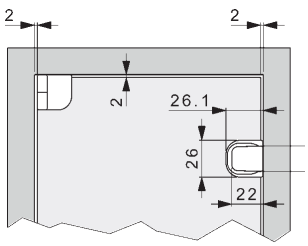

Hinge Installation
Stick the double-sided adhesive pad on the corner of the glass door. Peel off the foil. Place the glass door, the side with the pad facing outwards, into the mounted hinge. Tighten the fixing screw.

Pull Installation
Stick the double-sided adhesive pad onto the glass door. Peel off the foil. Place the glass door, the side with the pad facing outwards, into the pull. Tighten the fixing screw.

PU - Packaging unit

Machinery

GRASS PRO1 drilling and insertion machine for 45mm boring pattern

GRASS PRO1

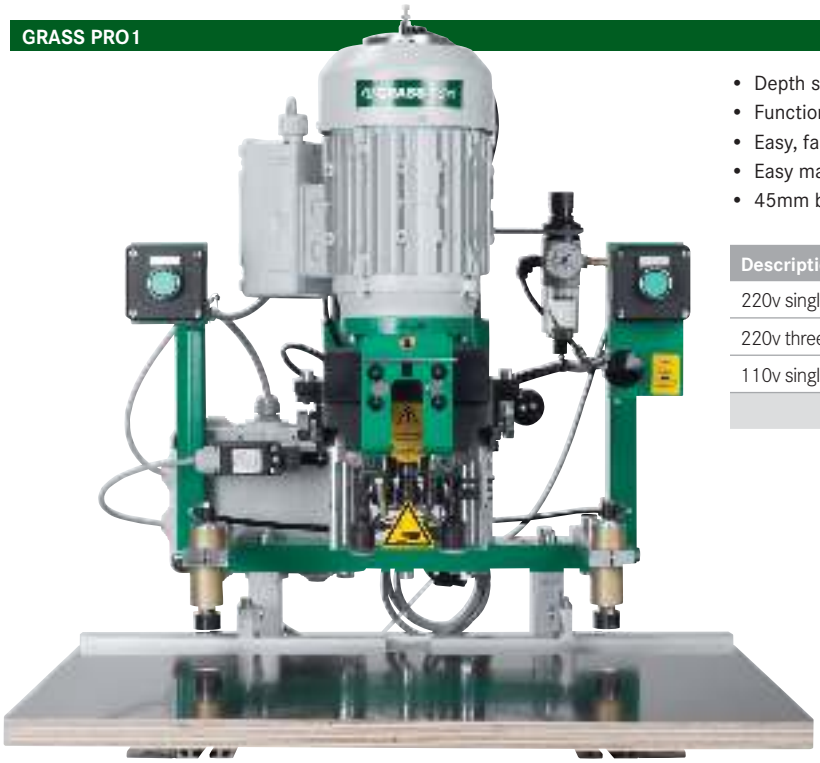

- Depth stop can be adjusted to material thickness
- Functional design
- Easy, fast and efficient operation
- Easy maintenance
- 45mm boring pattern

Description	Item No.	PU
220v single phase pneumatic	94559-01	1
220v three phase pneumatic	94560-01	1
110v single phase pneumatic	94561-01	1

GRASS PRO1 Features

Adjustable hold-down devices

Adjustable hold-down devices are suitable for a wide range of material thicknesses.
Holds door firmly in place for drilling and insertion and features manual release.

Pneumatic controls

Two-hand start button controls for safe drilling and insertion functions.

Quick change chucks

Easy drill bit removal and insertion using quick change chucks.

PU - Packaging unit

Dimensions in millimeters, fractional inch equivalents as noted.

Machinery

GRASS PRO1 accessories

Drill Bits

1

2

	Description	Direction	Item No.	PU
1	35mm bit	RH	00077-01	1
2	8mm bit	LH	00160-01	1

American Bit Set for Hinge Drilling	Item No.	PU
1 x 35mm/RH, 2 x 8mm/LH	00213-01	1

Fence Stops

1

2

	Description	Item No.	PU
1	Additional fence stop	949.200.21.0000	1
2	Universal fence stop	949.200.21.0100	1

Insertion Dies

1

2

3

4

5

	Description	Item No.	PU
1	Tiomos 110°/120°	**F146**101**310**201	1
2	Universal die for Tiomos 110°/120°/160°	**F146**101**308**201	1
3	TEC Die for all cup styles	92617	1
4	Nexis 110°/125°	04216-01	1
5	Nexis 170°	04218-01	1

Extension Fence

Description	Item No.	PU
Extension fence 400mm to 1650mm	88612-01	1

PU - Packaging unit

GRASS America Inc.
1202 NC Highway 66 South
Kernersville, NC 27284

Phone: 1-800-334-3512
Fax: 1-800-525-8406

Website: www.grassusa.com
E-mail: info@grassusa.com

GRASS Canada Inc.
10 Newgale Gate, Unit 7
Toronto, ON M1X 1C5

Phone: 1-800-461-4975
Fax: 1-416-335-5907

Internet: www.grasscanada.com
E-Mail: info@grasscanada.com

www.grassusa.com

Item #01988-01-NXB-5M-MAP-11/16(OL_V2_10/17)